Workshop Manual

4 H50 TIC

439 002 00 - 07.2015e Printed in Germany

Contents

Preface

1. General
Engine illustrations
Technical data
Type plate details
Lubricating oil circuit
Cooling circuit
Sealants and adhesives
Special tools and workshop equipment

2. Additional equipment
Z 01 Main fuel filter
Z 02 Suction hose
Z 03 Oxidation catalytic converter
Z 05 Alternator
Z 05 Starter
Z 06 Engine base
Z 07 Oil cooler
Z 30 Fan

Contents

3. Basic engine equipment
M 01 Cylinder crankcase
M 02 Crankshaft
M 04 Camshaft
M 02 Crankshaft gear wheel
M 01 Connector housing
M 17 Flywheel
M 10 Oil pump
Z 30 Pulley
M 05 Piston and conrod
M 10 Intake manifold
M 01 Oil sump
M 36 Water pump
M 01 Roller tappet
M 07 Cylinder head
M 07 Rocker arm
M 08 Cylinder head cover
Z 05 Glow plugs
M 07 Thermostat, temp. sensor
M 28 Exhaust manifold
M 28 Turbocharger
M 30 Lifting device
M 37 Exhaust gas return
M 14 Injection system
M 31 Crankcase ventilation

4. Tables

Screw tightening torque
Identification on wiring diagrams
HATZ cable marking
Bosch designation for cable marking
Cable harness max.
Cable harness min.
Wiring diagrams
CAN speed adjustment
Analog speed adjustment
Analog speed adjustment
Cable routing
Charge current curve

Preface

This Workshop Manual corresponds to the technical status as stated
on each page (month / year). It has been conceived so that only a trained mechanic (instructed yearly) can perform all repairs trouble-free.

Notes on how to clean parts etc. have been omitted, as it is taken for granted that this is known and will be accomplished.

All work may only be performed with the specified or absolutely equivalent tools.
It is a prerequisite that normal "hand tools" are at hand.

With respect to maintenance work, tools, troubleshooting, etc., we refer to the operator's manual.

Only use genuine Hatz original spare parts for repairs!
Only these parts guarantee problem-free dimensional accuracy and quality.

In addition, the general statutory regulations and those of the responsible professional trade associations apply.

Potential discrepancies due to special equipment are possible and can neither be accounted for in the Workshop Manual nor in the Spare Parts list.
In case of any difficulties, please contact the nearest HATZ service office.

HATZ DIESEL

SERVICE

1. General

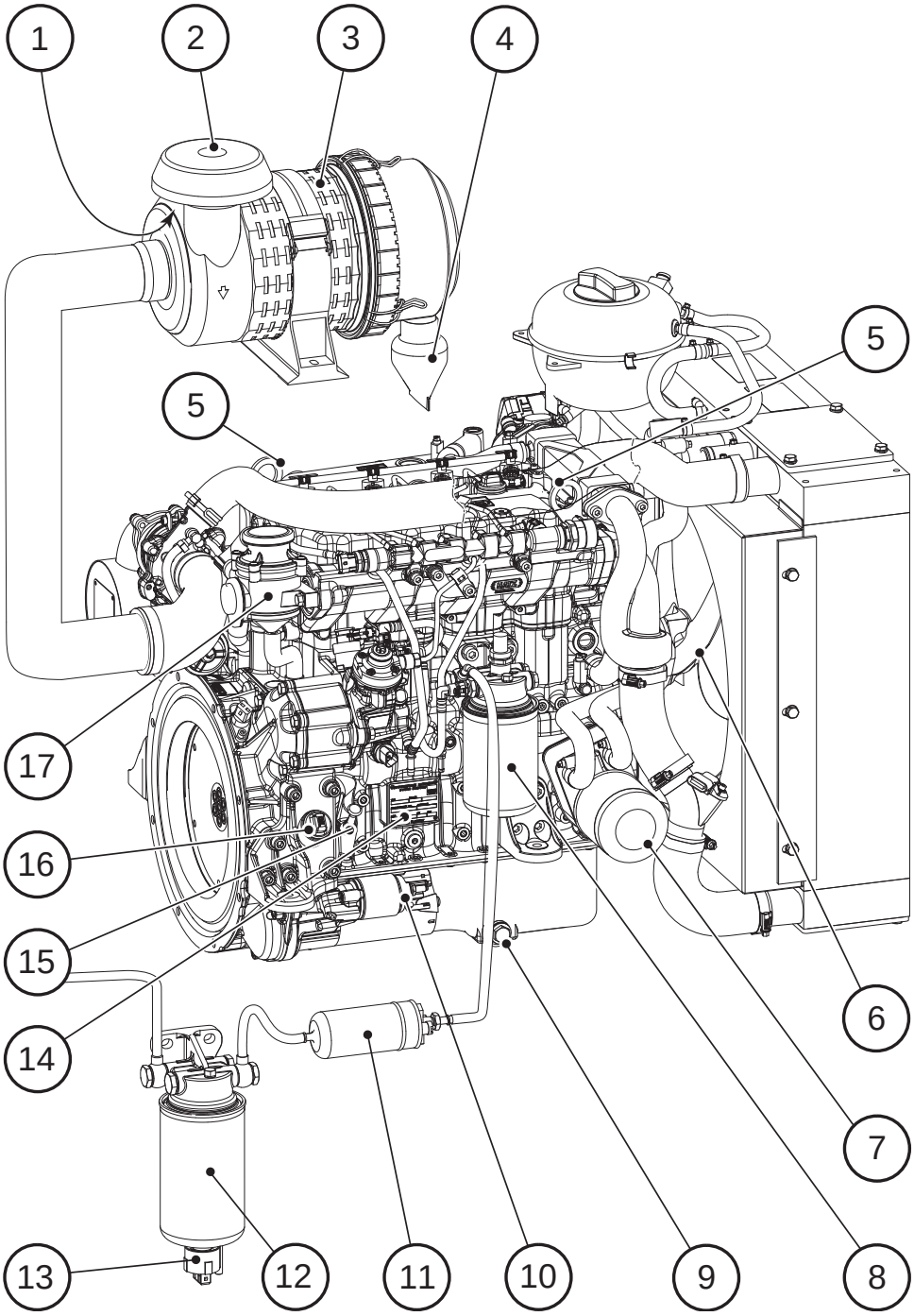

Intake side

1 Intake opening for combustion air
2 Rain cap
3 Air filter (option)
4 Dust discharge valve
5 Lifting eyes
6 Fan
7 Oil filter
8 Fine fuel filter
9 Side oil drain screw
10 Starter (low installation position)
11 Electric fuel pump
12 Fuel pre-filter
13 Drain screw on the fuel pre-filter
14 Engine type plate
15 Dipstick
16 Oil filler screw bottom
17 Crankcase ventilation

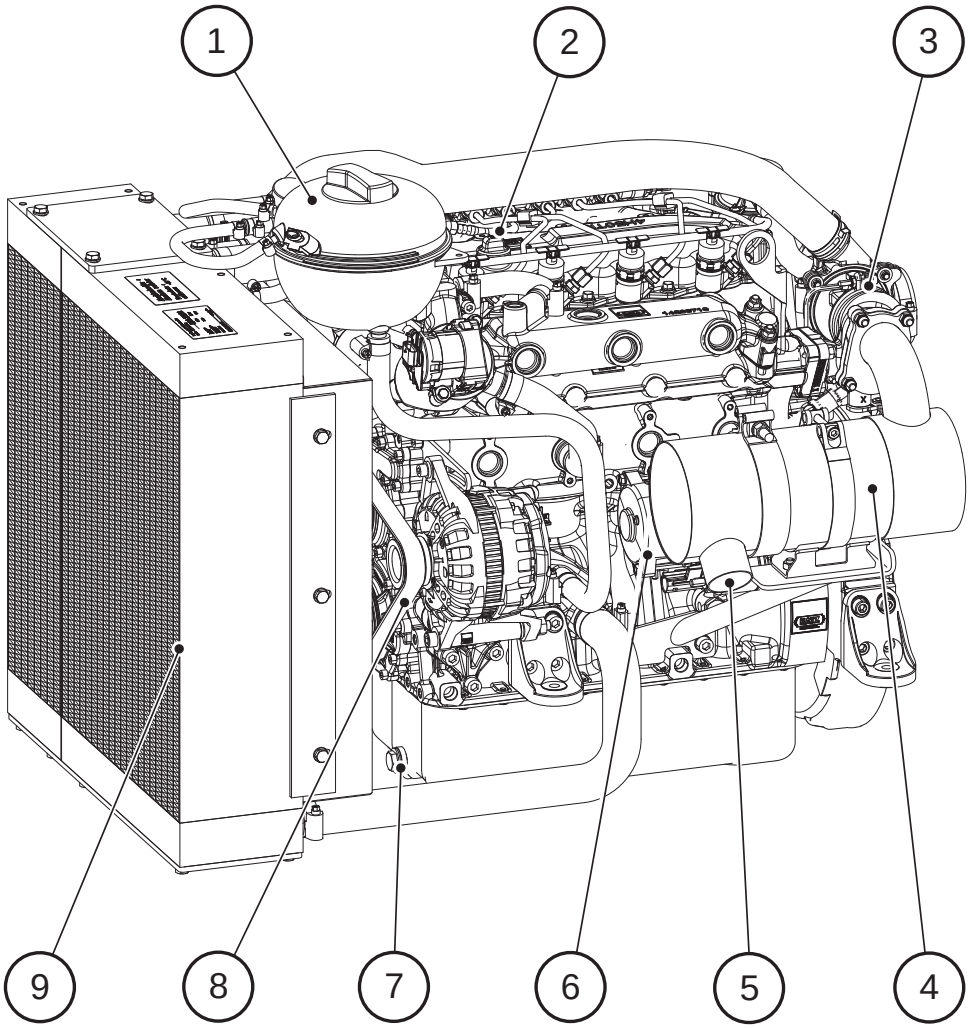

Exhaust side

1 Expansion tank for coolant (option)
2 Oil filler screw top
3 Exhaust gas turbocharger
4 Oxidation catalytic converter
5 Exhaust gas discharge
6 Starter (high installation position)
7 Oil drain screw front
8 Poly v belt
9 Radiator (option)

Type		3H50TIC	4H50TIC
Type		Liquid-cooled four stroke diesel engine	
Combustion system		Direct injection, turbocharger with charge air cooling, cooled exhaust-gas recirculation	
Injection system		Bosch common rail	
Number of cylinders		3	4
Bore/stroke	mm	84/88	84/88
Displacement	cm^3	1464	1952
Fill quantity of lubricating oil	Approx. ltr.	5.25? [1)]	7.0 [1)]
Difference between "max" and "min" marking	Approx. ltr.	? [1)]	1.0 [1)]
Engine oil consumption (after running-in period)	Max.	1% of fuel consumption, with respect to full load	
Engine oil pressure		2.5 bar to 4.5 bar	
Coolant quantity with HATZ standard radiator and expansion tank	Approx. ltr.	?	12.5
Direction of rotation when looking at flywheel		Left	
Tappet clearance		Automatic tappet clearance compensation	
Max. perm. inclination during continuous operation in every direction:		30° [2)]	
Weight (incl. radiator and catalytic converter) without operating fluids	approx. kg	?	226
Battery capacity	Max.	12 V – 110 Ah / 450 A according to DIN 24 V – 66 Ah / 300 A according to DIN	

1) These details must be understood as approx. values.
Relevant is in every case the **max.** marking on the dipstick.
2) Exceeding these values causes engine damage.

Engine type plate

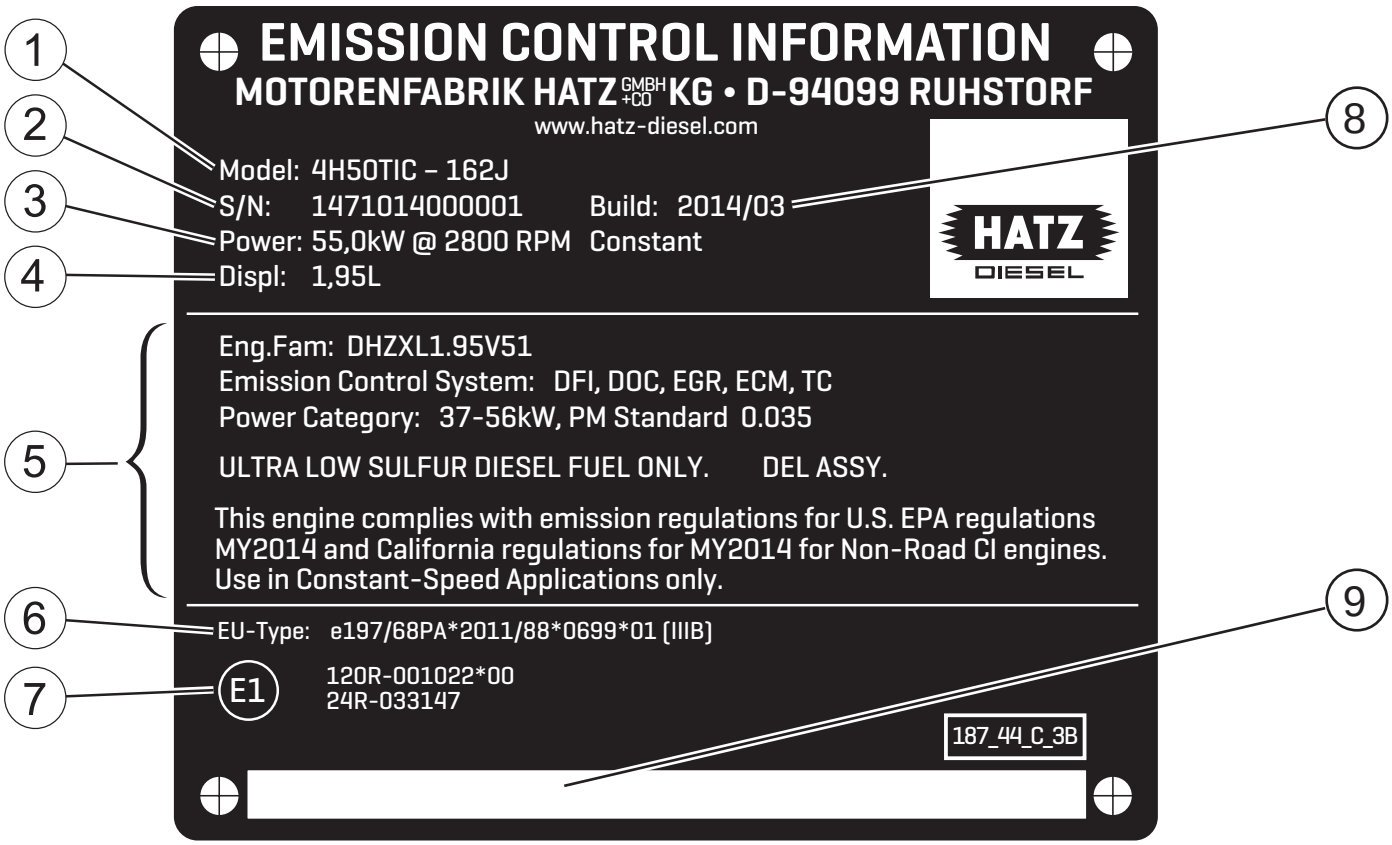

The engine type plate is affixed to the crankcase and includes the following engine information:

1 Model designation of the engine
2 Engine number (serial number of the engine)
3 Engine output (kW) at rated speed (min-1)
4 Displacement (liters)
5 Information for US emissions certification (EPA/CARB)
6 EU type approval
7 EU country of origin (Germany)
8 Year of construction (year/month)
9 Bar code (engine number)

The following data must always be specified in case of queries and for spare parts orders:

1 Model designation
2 Engine number

Lubricating oil circuit

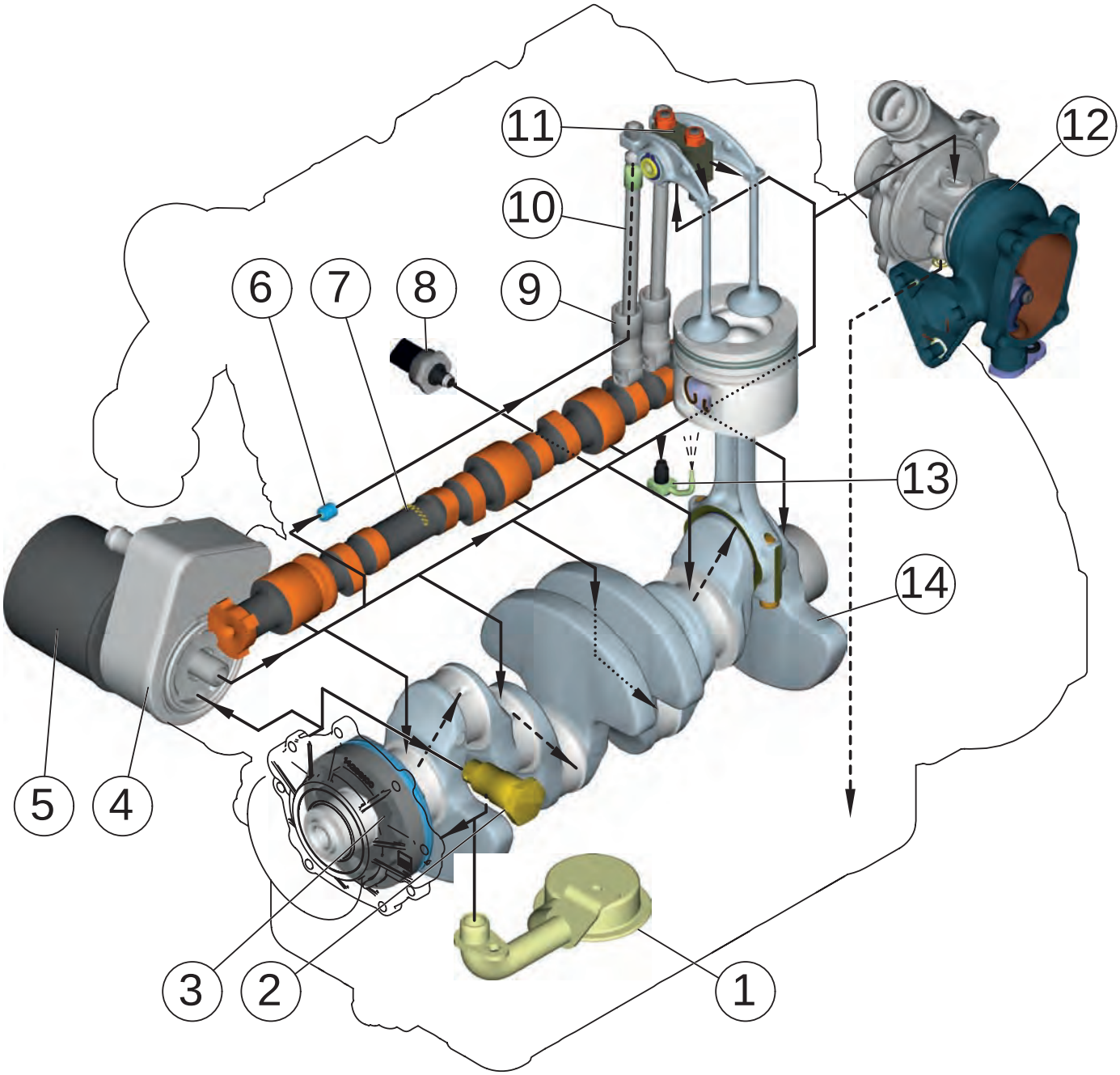

1 Oil intake pipe
2 Oil pressure relief valve
3 Oil pump
4 Oil cooler
5 Oil filter
6 Check valve
7 Camshaft
8 Oil pressure sensor
9 Roller tappet with HVA element
10 Push rod
11 Rocker arm bearing block with injection nozzles
12 Turbocharger
13 Piston cooling
14 Crankshaft

Cooling circuit diagram 4H50

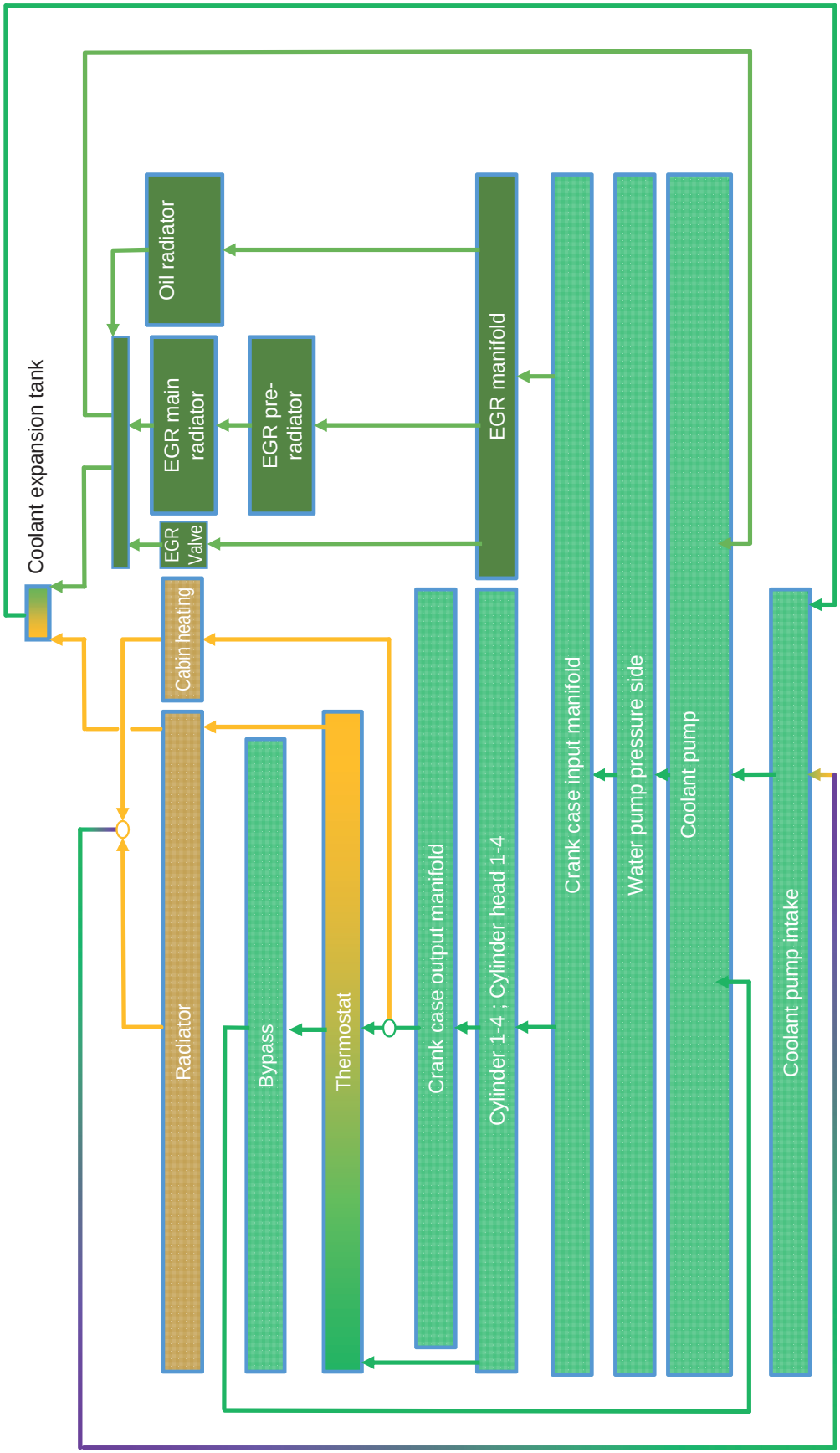

Cooling circuit diagram 4H50 – within the engine

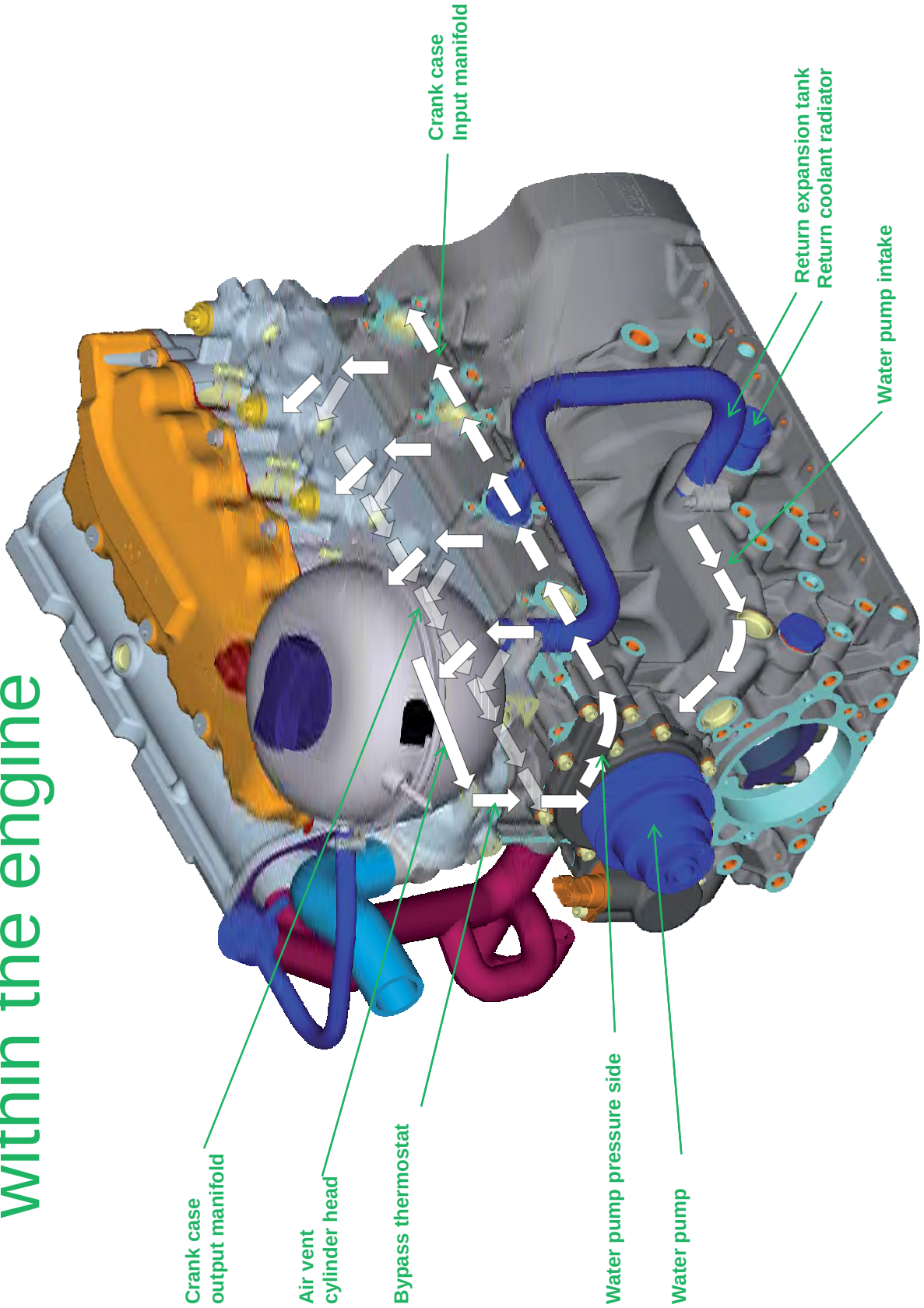

Cooling circuit diagram 4H50 – radiator and cabin heating

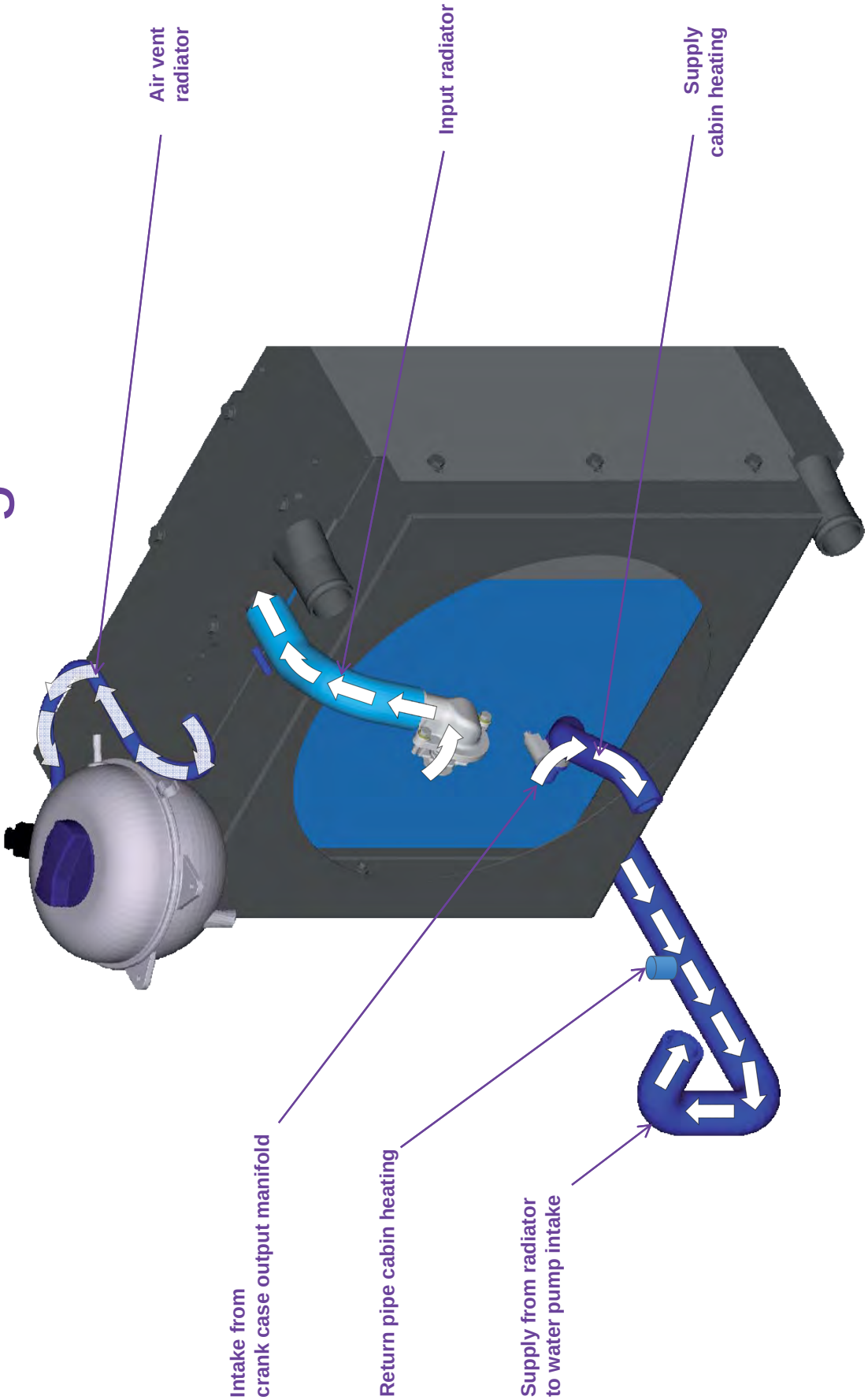

Cooling circuit diagram 4H50 – exhaust gas recirculation and oil radiator

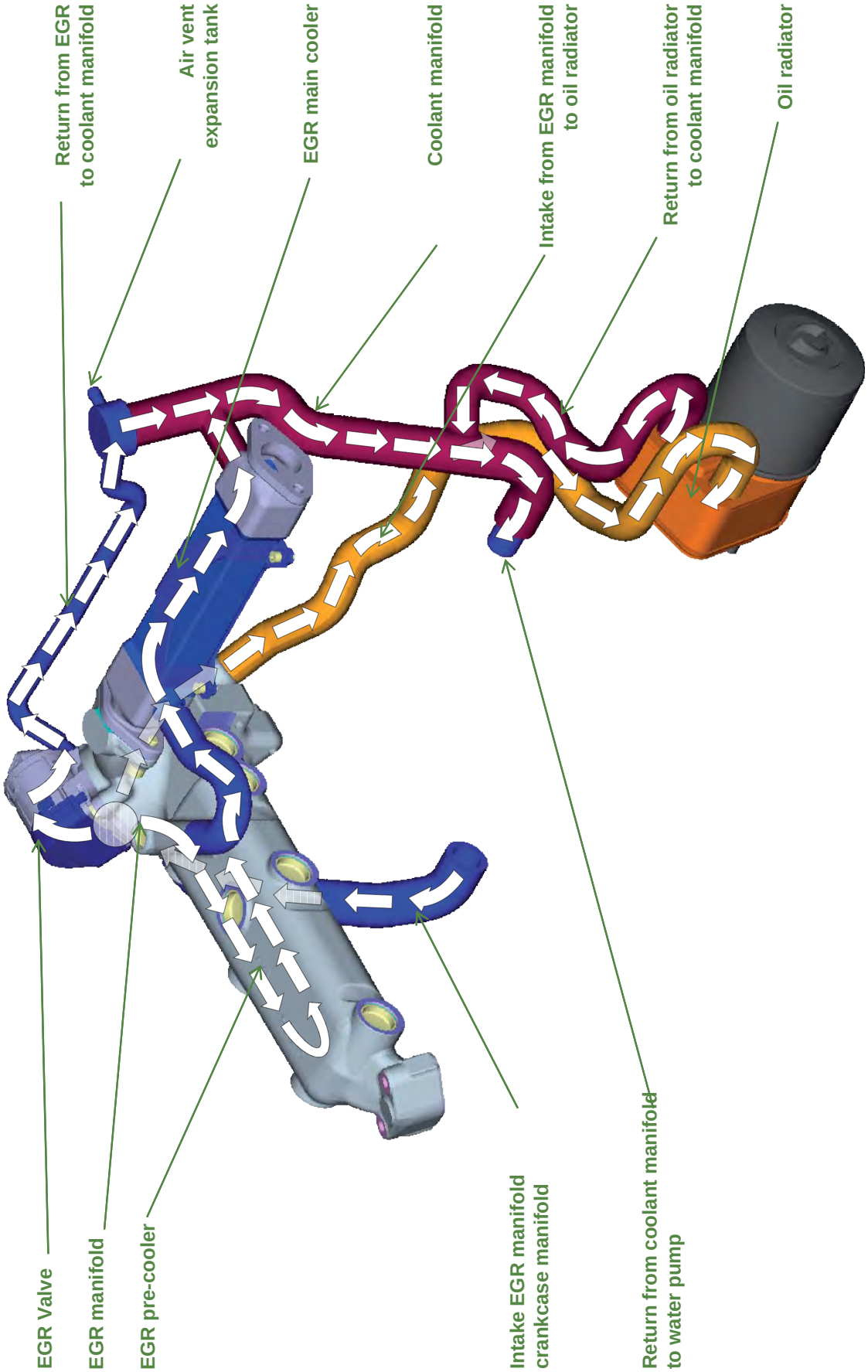

Application of sealant and adhesive material:

502 230 01	Loctite Activator	500 ml
700 189 18	Loctite 243	50 ml
502 234 00	Loctite 648	10 ml
502 825 01	Silicon	30 ml
700 218 15	Silicon	300 ml
502 830 02	high-temperature paste	1000 g

Assembly/disassembly cylinder head + exterior area

No.	Ident no.	Designation
1	626 383 00	Piston ring collet chuck ø 70 - 100mm
2	612 099 00	Multi-tooth wrench socket M8
3	620 307 01	Strap wrench
4	612 090 01	Piston ring expander
5	700 217 64	Socket wrench for cyl.K E14 1/2"
6	700 106 34	Socket wrench SW 27 for oil pressure sensor
7	700 106 76	Socket wrench SW 36 for oil filter adapter
8	653 368 00	Centering bolts for engine mount
9	653 474 00	Measurement device for gap
10	700 113 94	Hose clamping tongs
11	702 534 99	Kink torque wrench
12	702 534 97	Screwdriver torque
13	702 534 98	Rotation angle measurement device (Gedore)

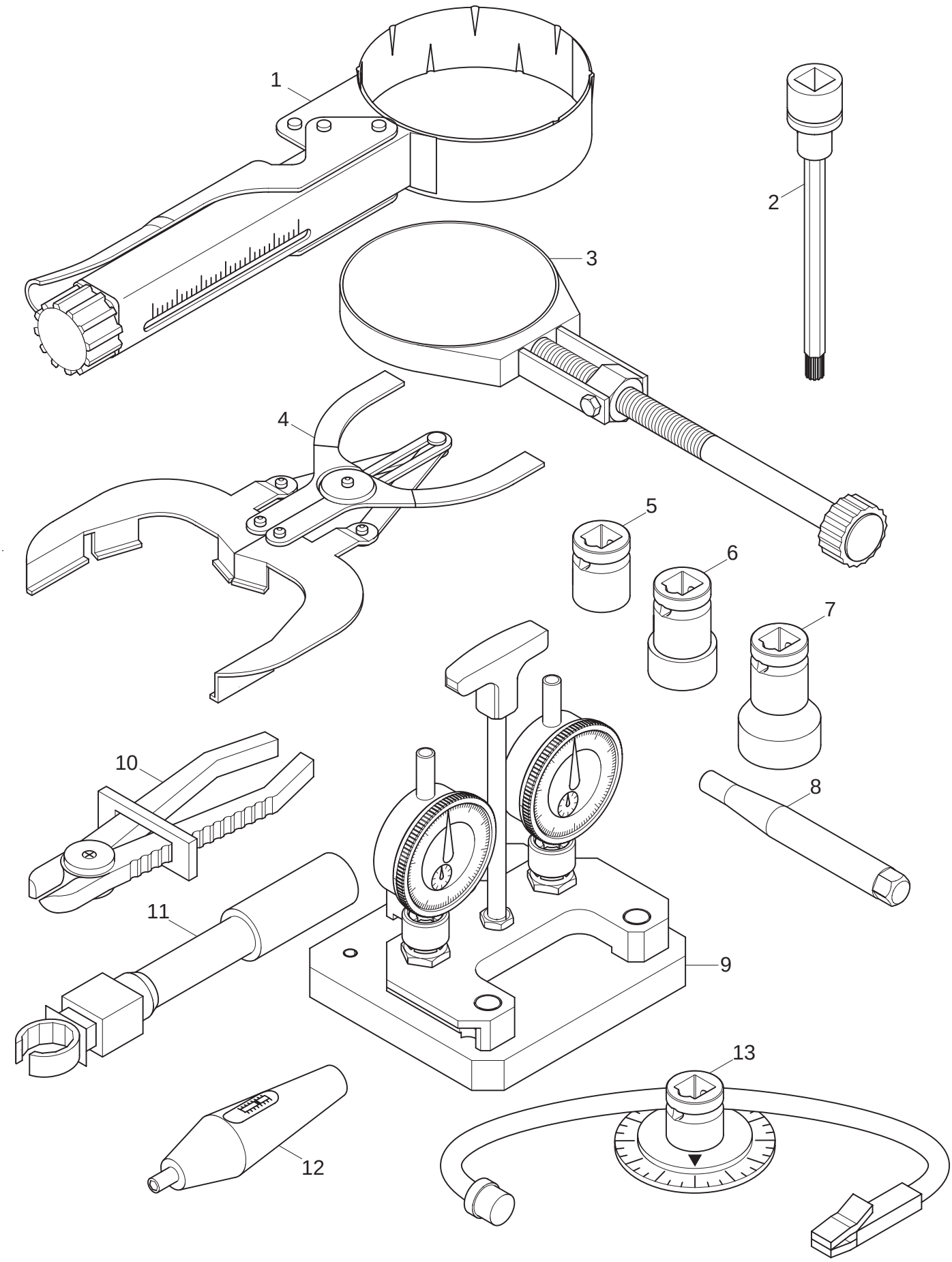
1
2
3
4
5
6
7
8
9
10
11
12
13

Assembly/disassembly - engine

No.	Ident no.	Designation
1	653 480 00	Counterholder for flywheel
2	653 466 00	Assembly pin for roller tappet
3	653 464 00	Magnet holder for roller tappet guide
4	653 517 00	Turning device for engine benches
5	702 517 89	Socket wrench for conrod T50 1/2"

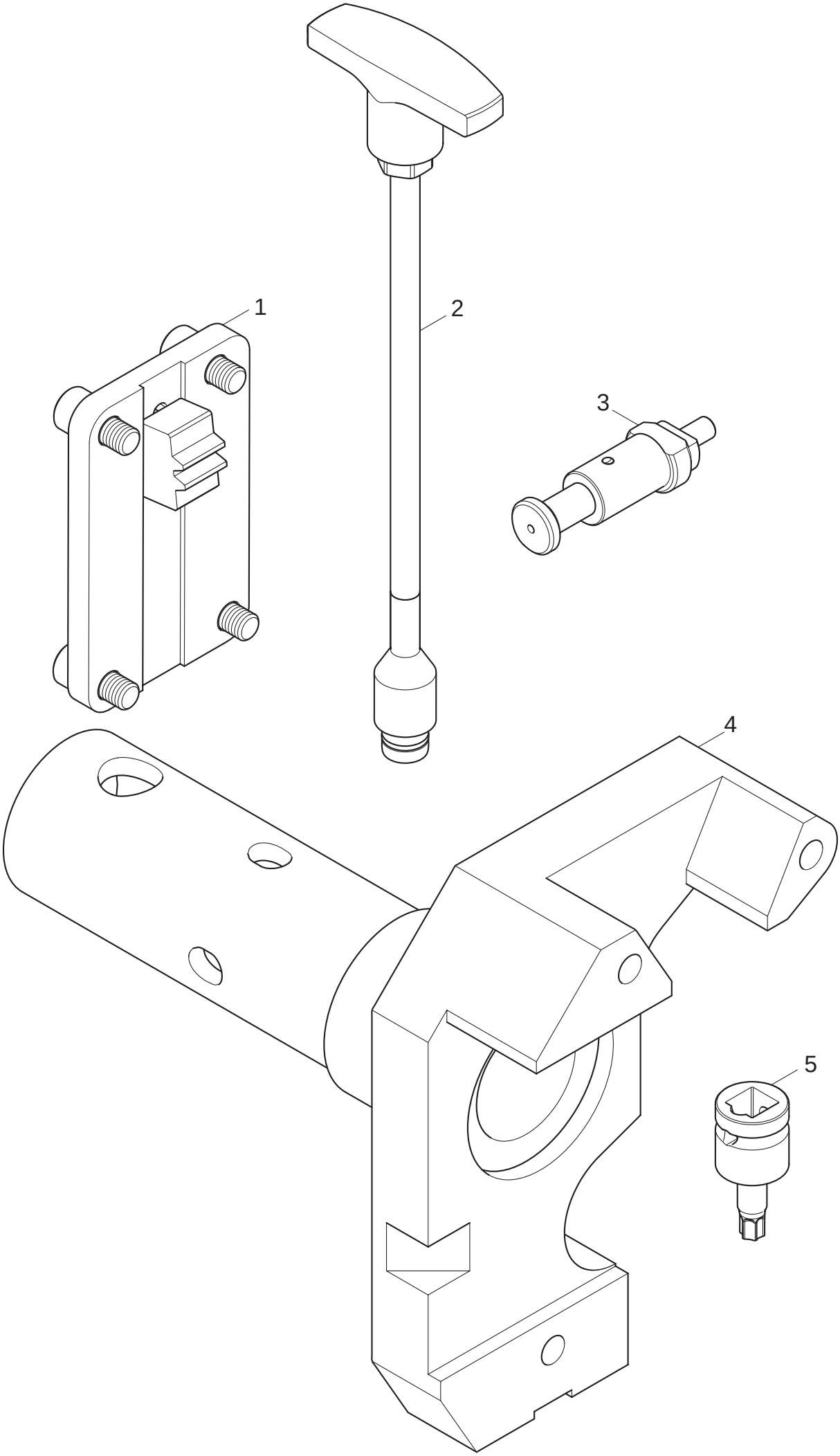
1
2
3
4
5

Component servicing

No.	Ident no.	Designation
1	629 223 01	Valve lifting tool
2	634 142 00	Honing tools 50-175
3	634 143 00	Replacement stones for honing tools

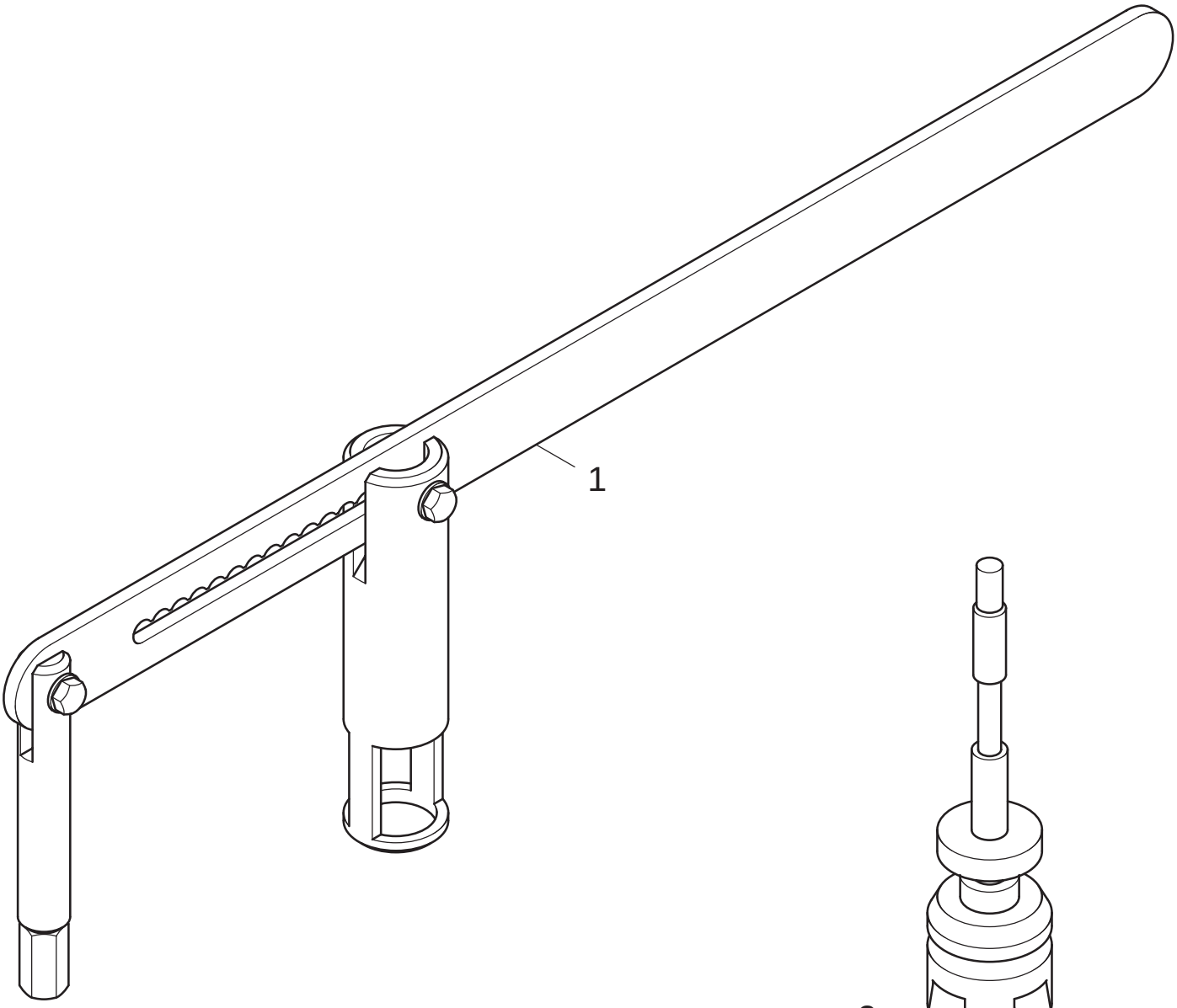
1

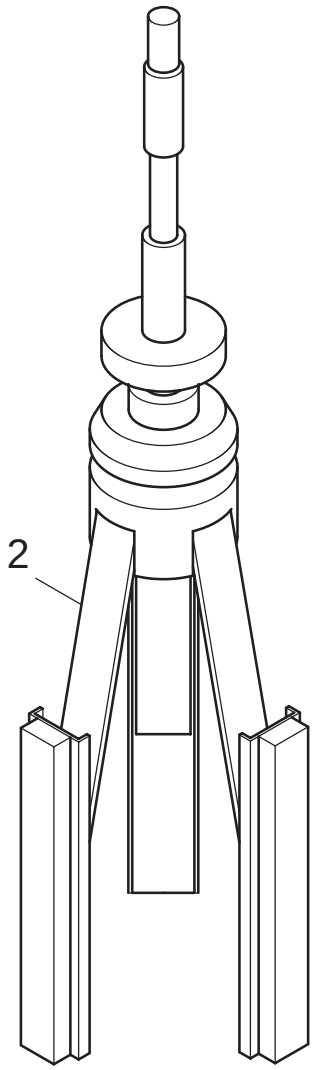
2

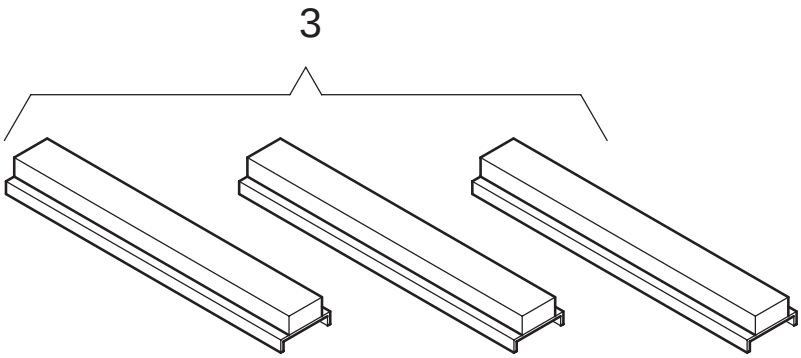
3

Test bench set-up

No.	Ident no.	Designation
1	- - - - - - - -	Part cannot be ordered individually, please order group
2	- - - - - - - -	Part cannot be ordered individually, please order group
3	652 948 00	Engine mountings F2F
4	647 639 00	Guard tube
5	629 242 00	Adapter for guard device
6	612 963 01	Base frame "large"
7	618 996 00	Machine bearing "replacement"
8	- - - - - - - -	Part cannot be ordered individually, please order group
9	- - - - - - - -	Part cannot be ordered individually, please order group
10	654 197 00	Engine mountings OPU

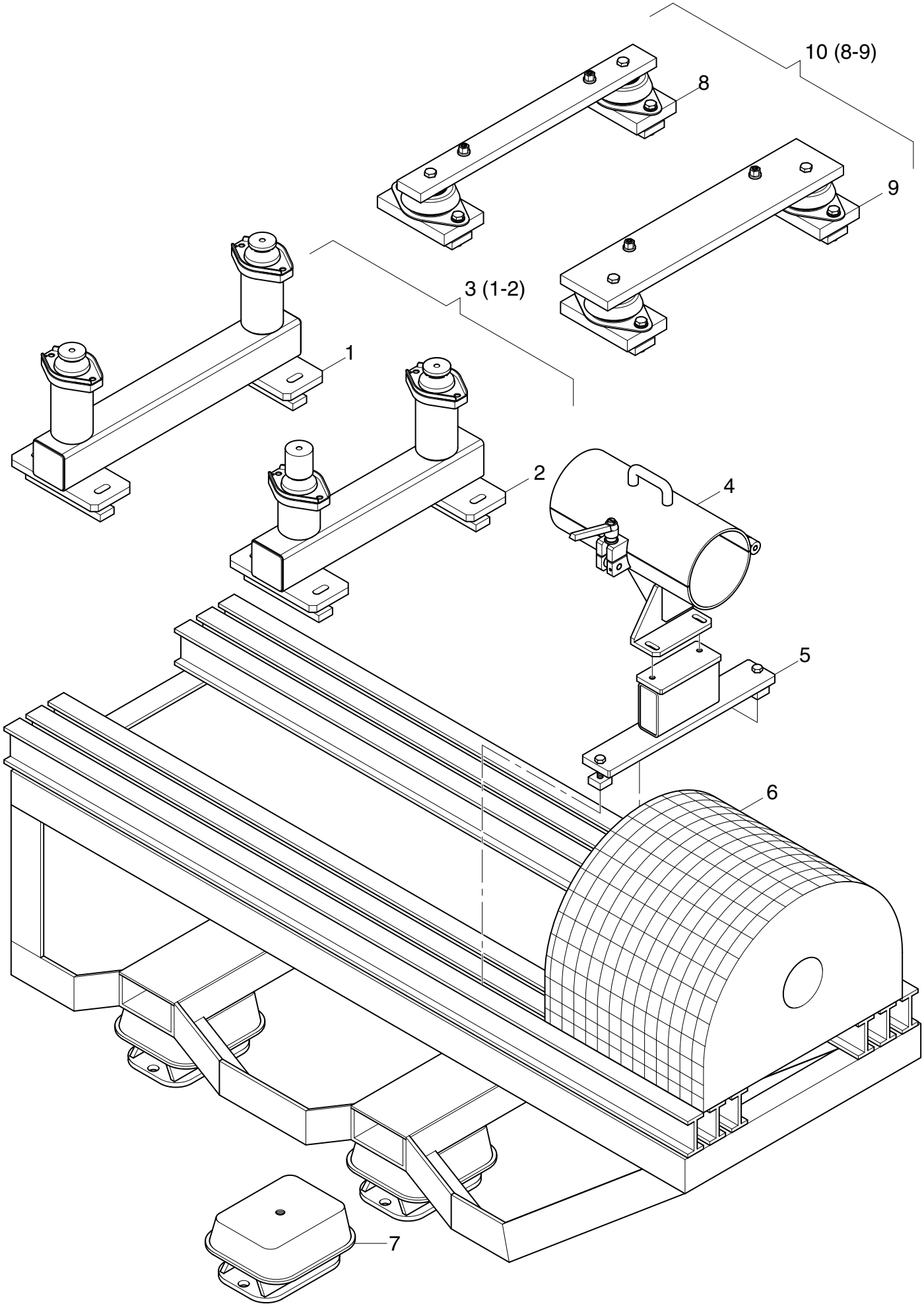
10 (8-9)
8
9
3 (1-2)
1
2
4
5
6
7

Test bench set-up

No.	Ident no.	Designation
1	624 851 01	Temperature measurement device
2	624 861 01	Sensor extension cable
3	653 290 00	Assembly table
4	635 303 90	Adapter flange 6-8-hole
5	631 147 90	Driven flange
6	630 705 00	Drive shaft 8-hole
7	630 706 00	Rod end 8-hole "new"
8	634 287 00	Rod end 8-hole "replacement"
9	634 286 00	Joint insert 8-hole

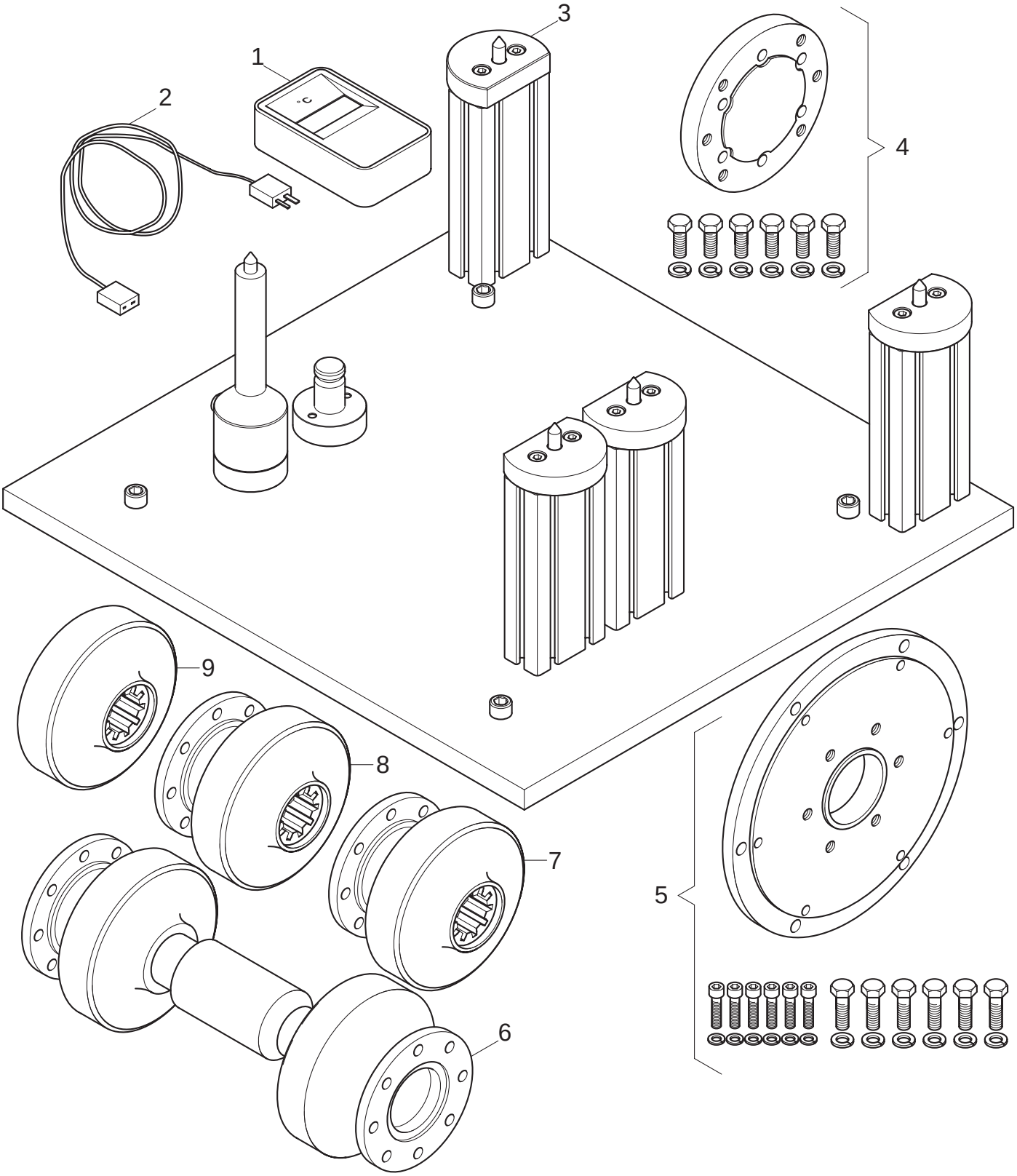
1
2
3
4
5
6
7
8
9

Adjustment and diagnostic equipment

No.	Ident no.	Designation
1	624 838 92	Revolution counter for fuel pressure pipe
2	- - - - - - - - -	Part cannot be ordered individually, please order group
3	638 342 00	Charging cable with 12V pole clamps
4	- - - - - - - - -	Part cannot be ordered individually, please order group
5	638 340 00	Cable for Piezo sensor
6	631 965 00	Piezo sensor 6mm
7	638 341 00	Photo sensor with cable
8	641 236 00	Speed differential adapter
9	639 123 00	Holder for photo sensor 1B
10	638 343 00	Speed sensor for ignition cable
11	635 776 00	Photo sensor with cable
12	634 268 00	Cable for Piezo sensor
13	702 503 97	Reflex marks (1 sheet = 35 pieces)

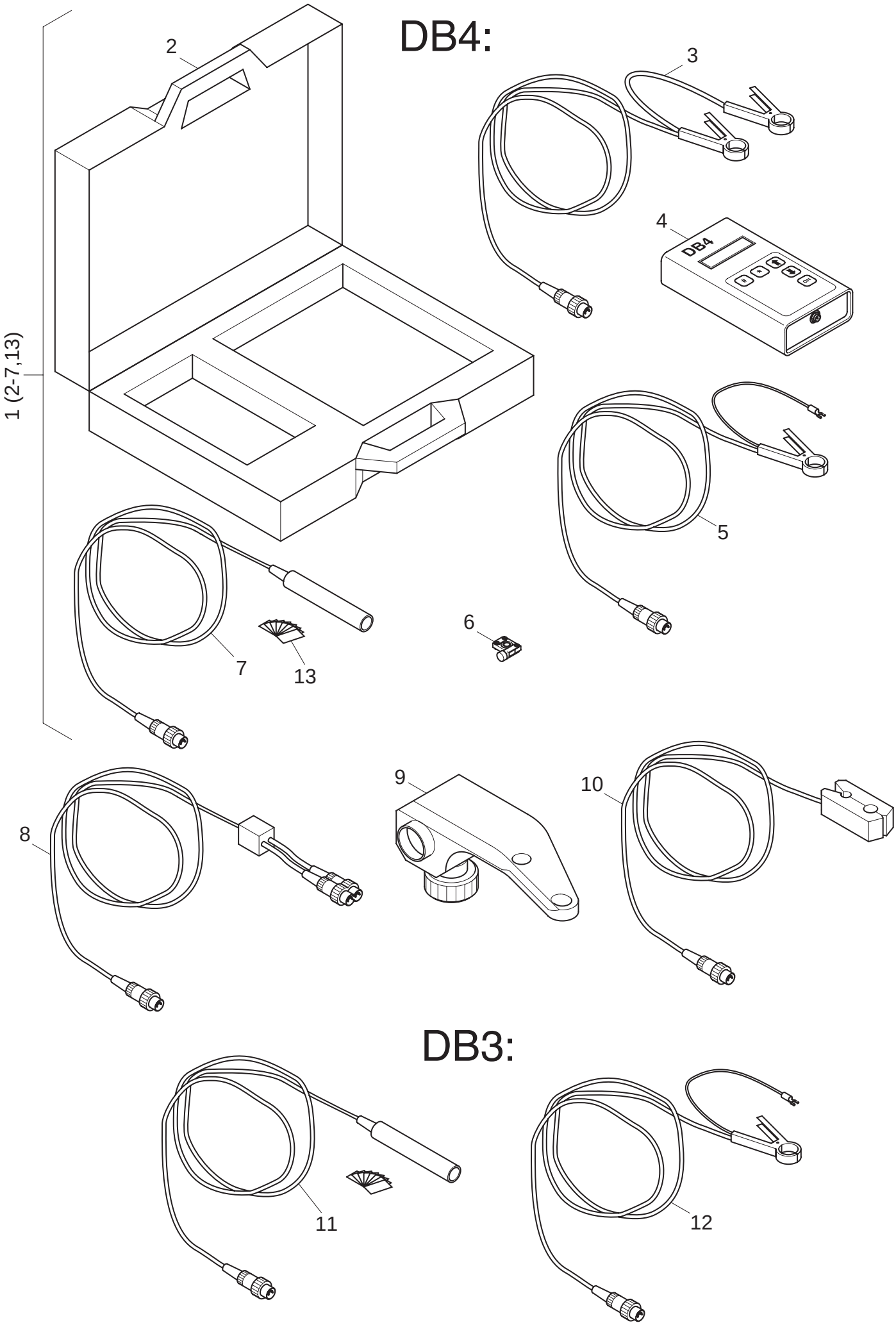
DB4:
2
3
4
DB4
1 (2-7,13)
5
6
7
13
8
9
10
DB3:
11
12

Adjustment and diagnostic equipment

No.	Ident no.	Designation
1	- - - - - - - - -	Part cannot be ordered individually, please order group
2	- - - - - - - - -	Part cannot be ordered individually, please order group
3	- - - - - - - - -	Diagnostic tool (Bosch) VCI
4	653 772 00	BG diagnostic tool VCI
5	702 536 30	Return flow quantities measurement device

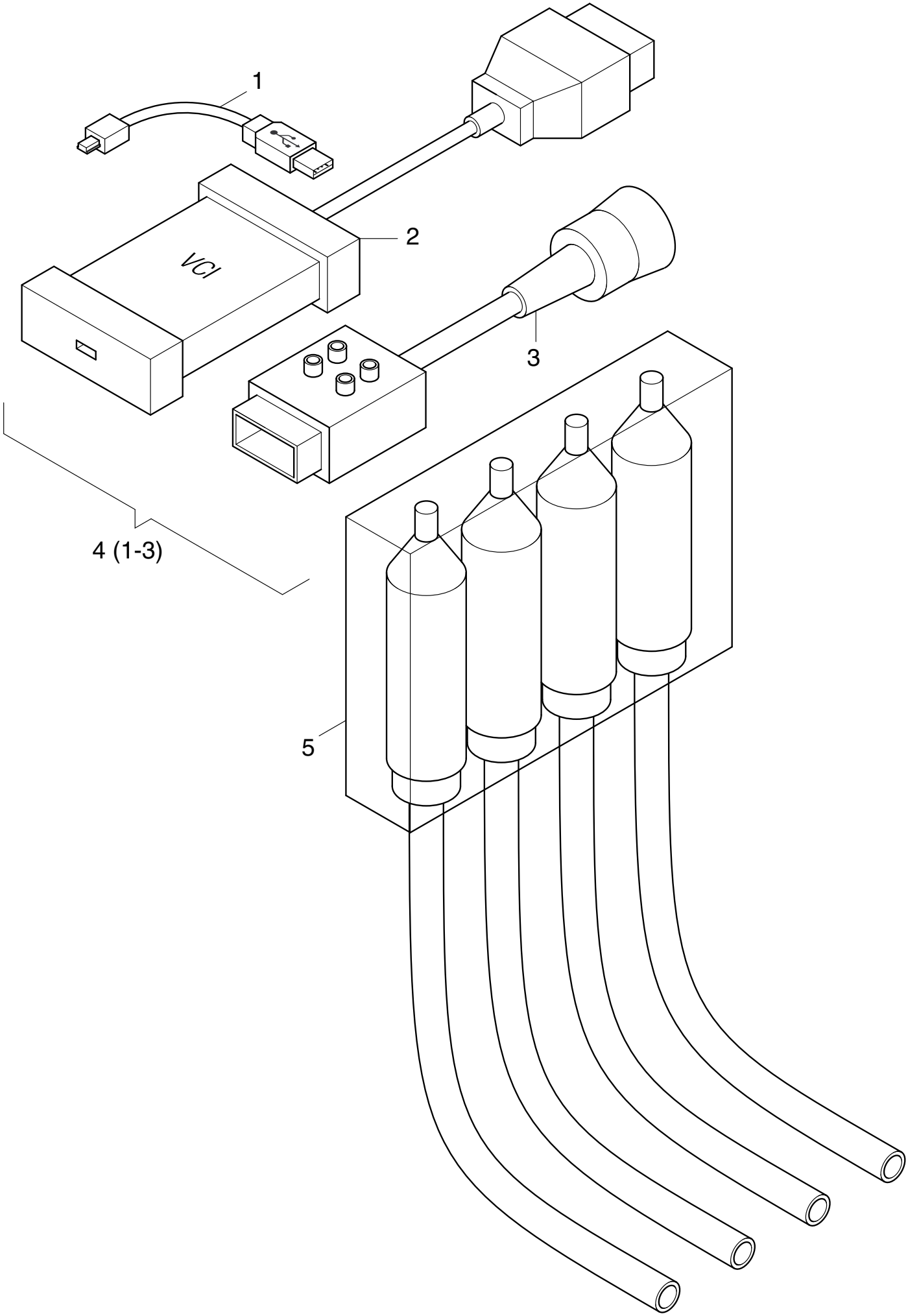
1
2
VCI
3
4 (1-3)
5

Cooling system

No.	Ident no.	Designation
1	702 530 56	Radiator vacuum filling device
2	702 530 57	Tank for filling device

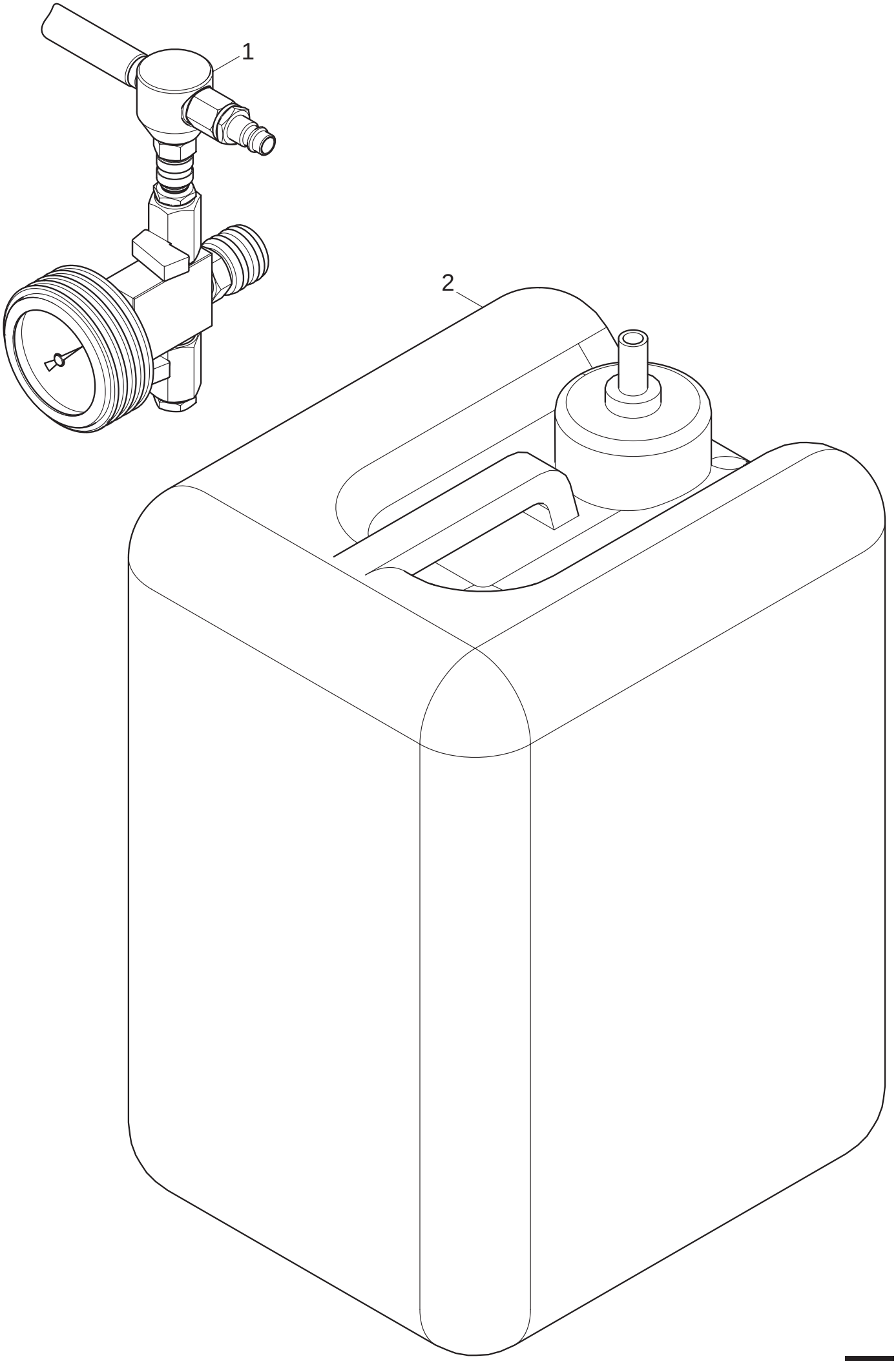
1
2

Electrical equipment

No.	Ident no.	Designation
1	700 318 32	Crimping pliers "Garant F28/95"
2	700 348 26	Mounting pliers "Deutsch HDT 48-00"

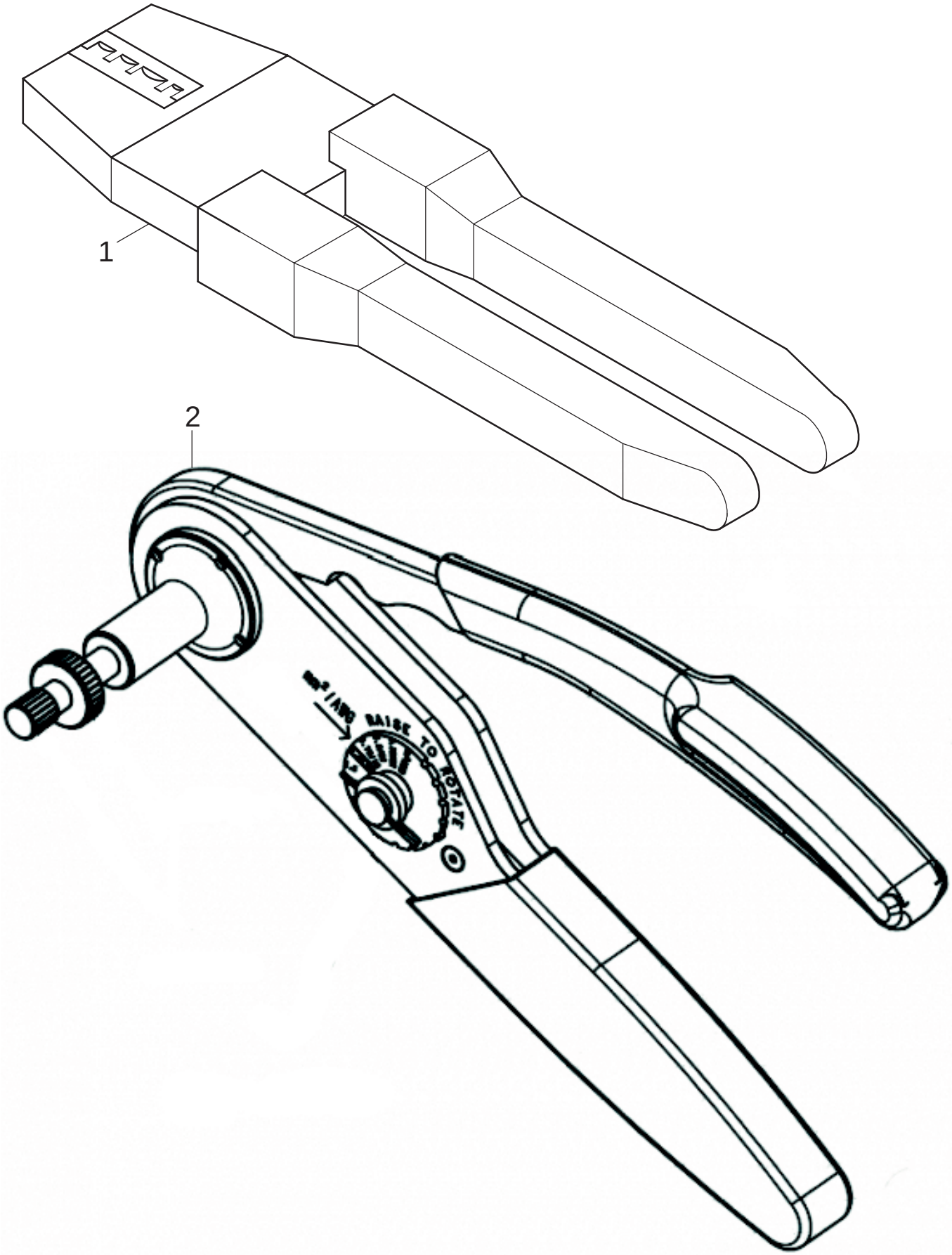
1
2
RAISE TO ROTATE

2. Additional equipment

Z 01 Main fuel filter

Absolute cleanliness!

Protective caps may only be removed from the parts directly before mounting!

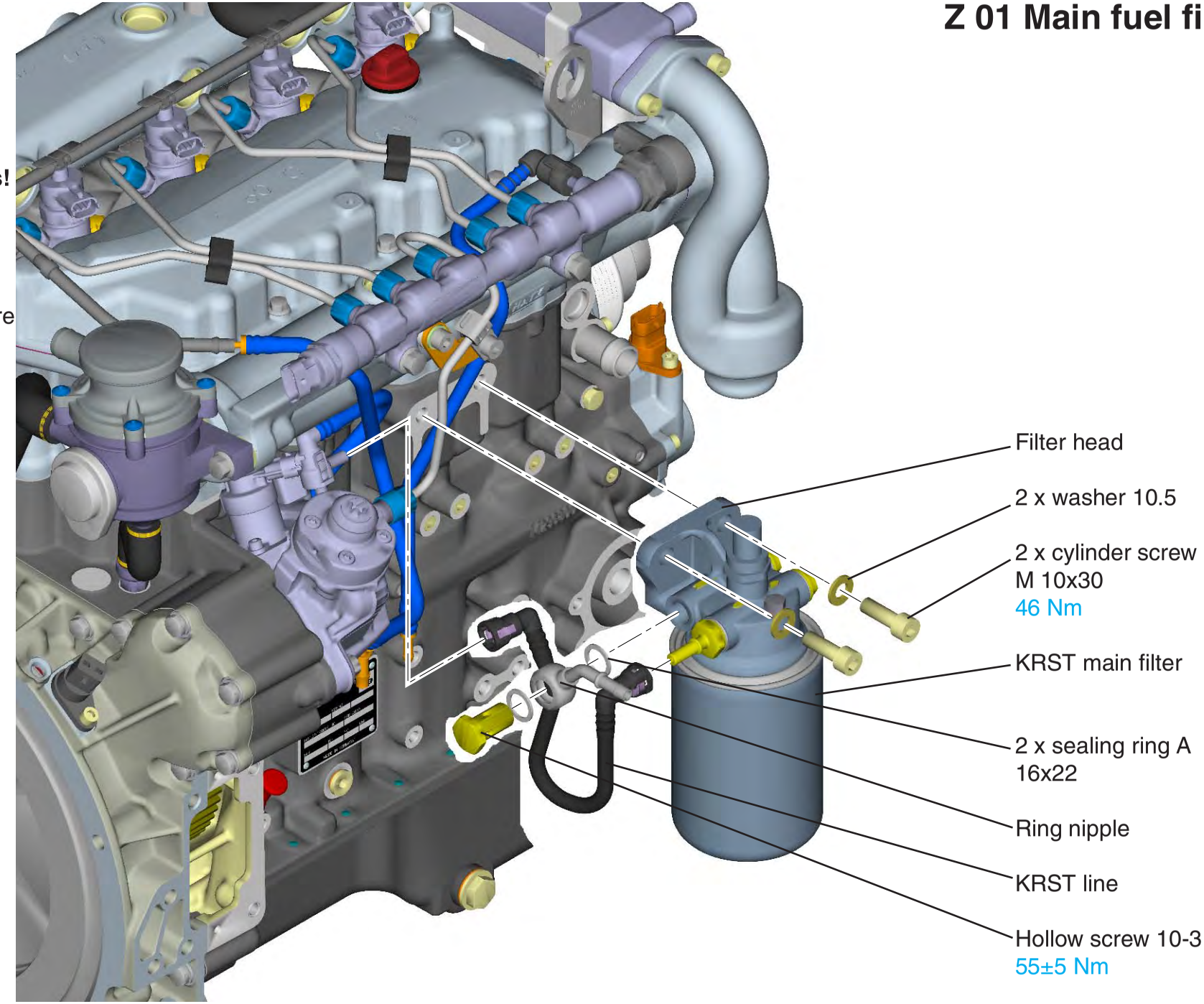

Z 02 Suction hose

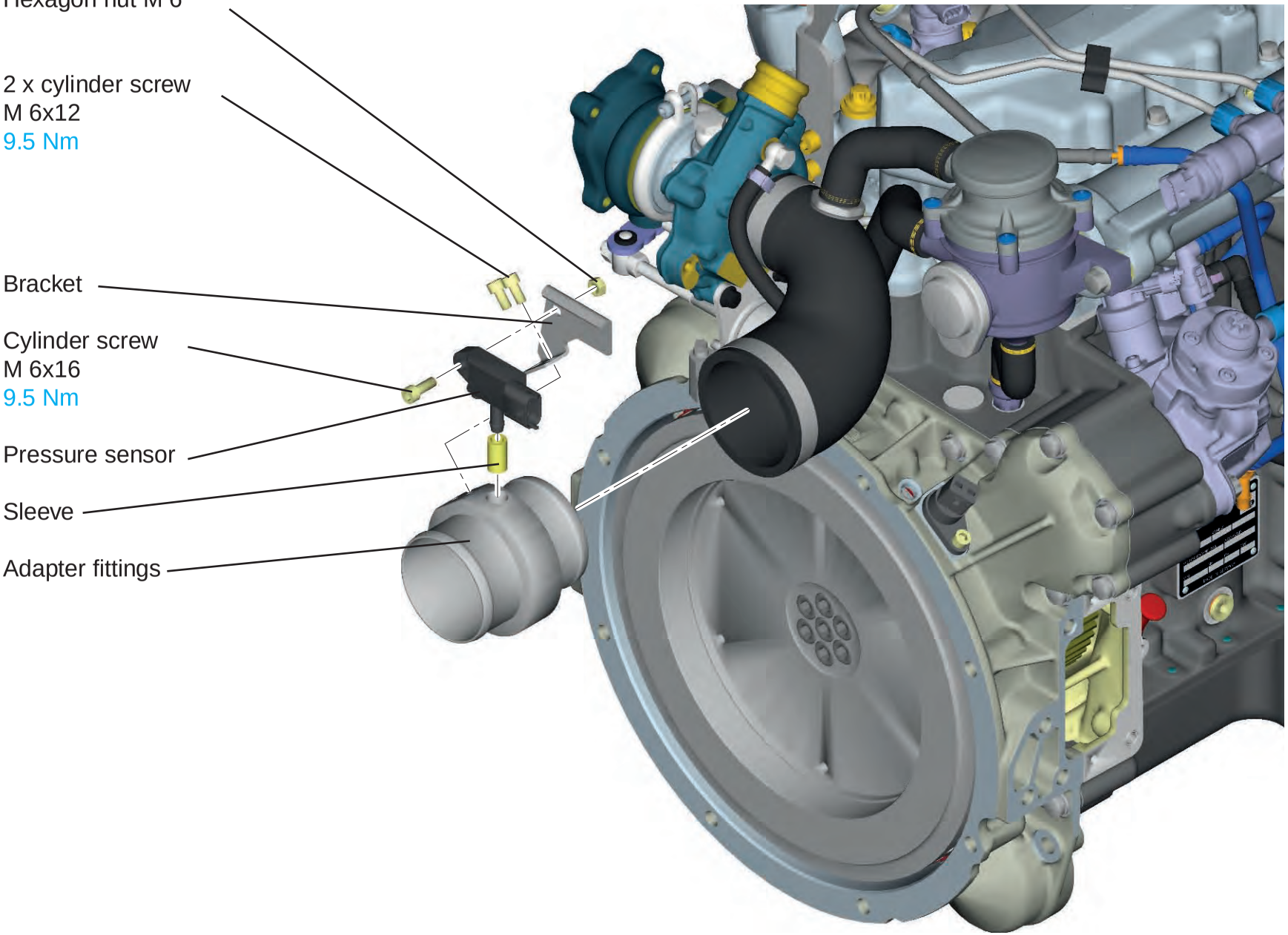

Z 03 Oxidation catalytic converter

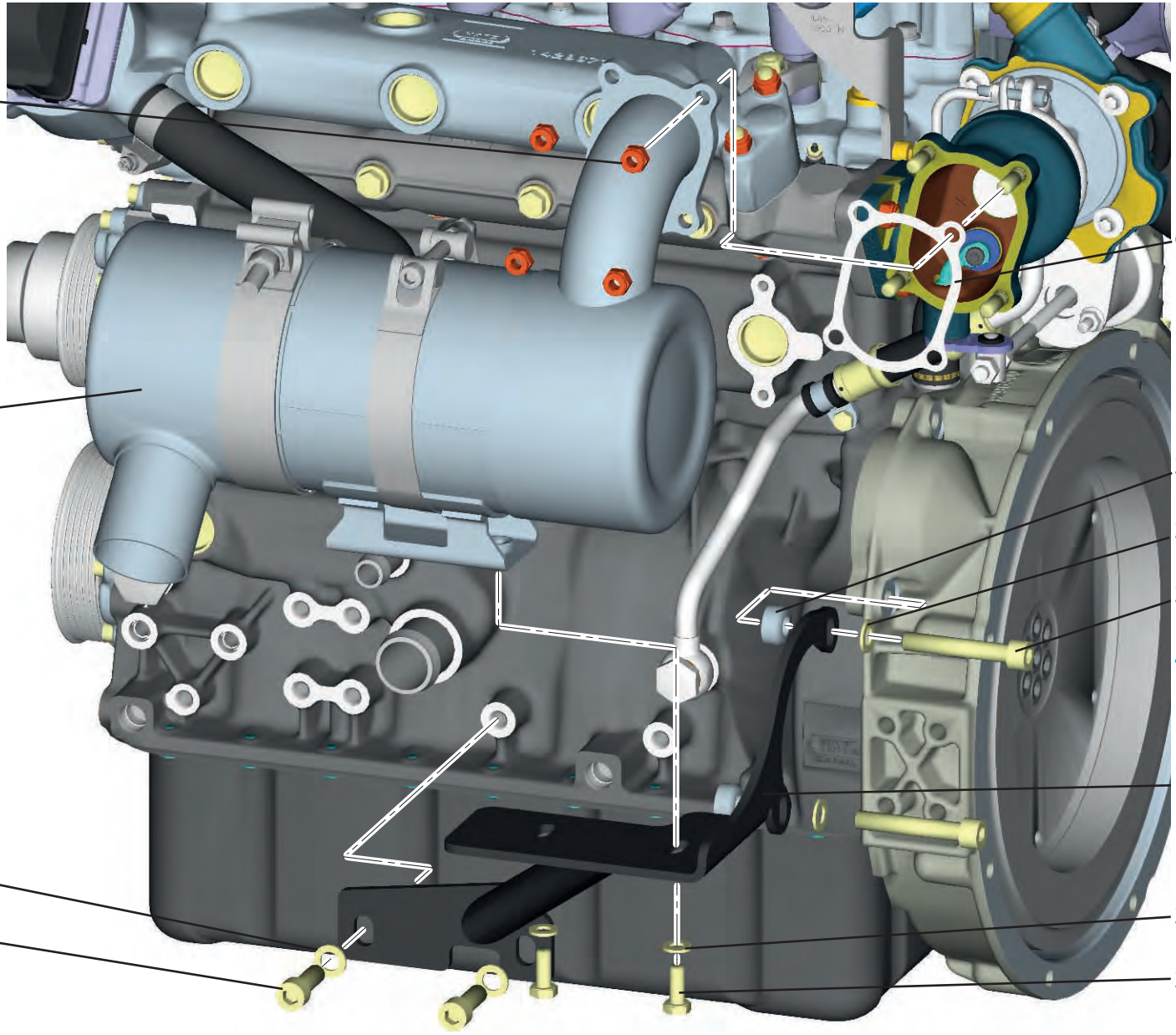

4 x hexagon nut
VM 8
23 Nm

Oxidation catalytic converter
(incl. piping, flange and support)

2 x washer 10.5

2 x cylinder screw
M 10x30
Secure with Loctite 243
46 Nm

Gasket

2 x spacers

2 x washer 10.5

2 x cylinder screw
M 10x60
46 Nm

Fastening

2 x washer A 8.4

2 x hexagon bolt
M 8x20
Secure with Loctite 243
23 Nm

Z 05 Alternator

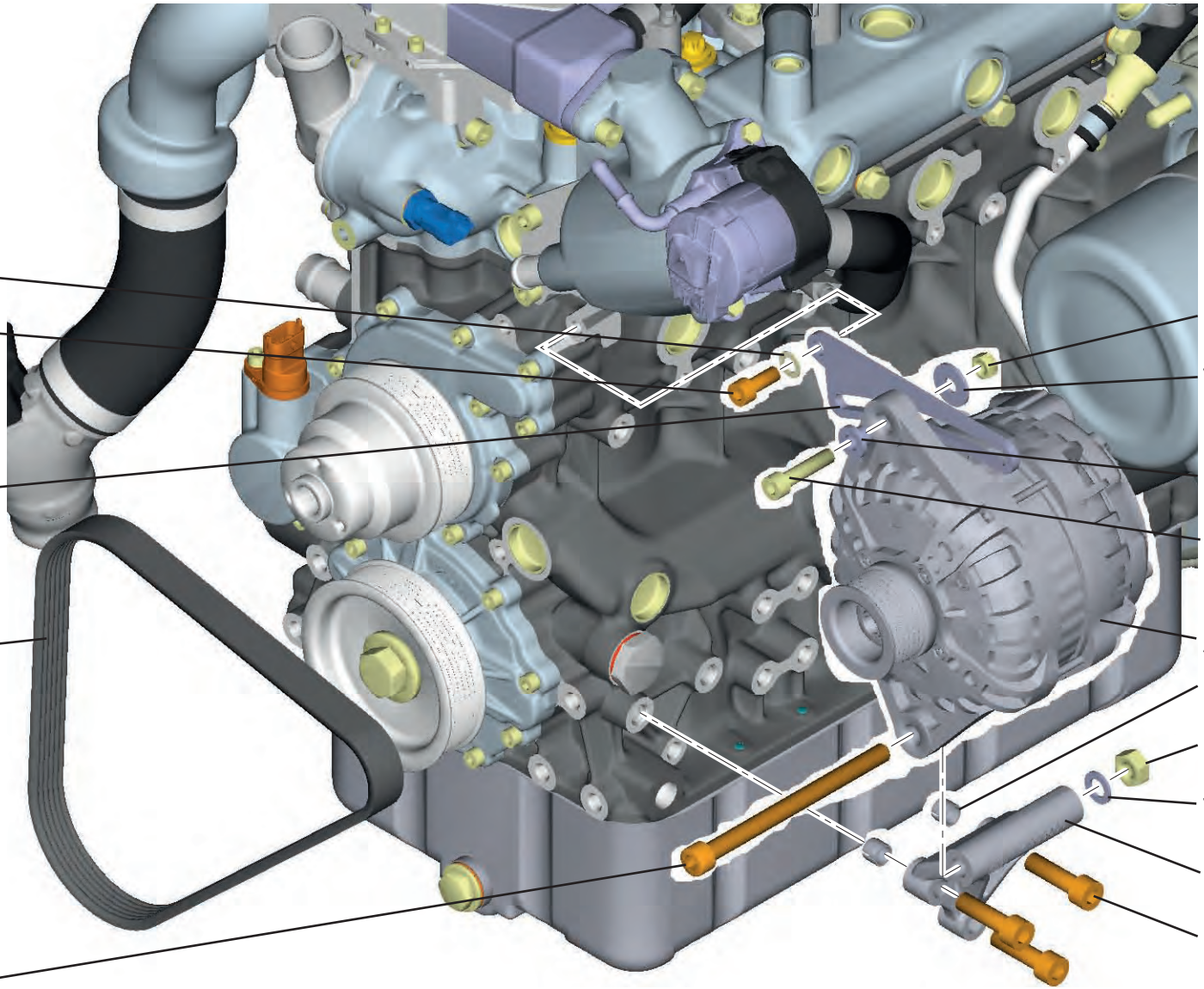

Washer 8.4

Cylinder screw
M 8x20
23 Nm

Tensioning arm

Poly v belt
6PK 768
Pretensioning of new belt: 480 + 50 N
Pretensioning after service: 250 + 30 N
Minimum pretensioning force: 170 N

Cylinder screw
M 10x130
46 Nm

Hexagon nut M 8

Washer B 8.4

Flange sleeve

Cylinder screw
M 8x35
23Nm

Alternator 14V/110A
2 x spring pin 12x10

Hexagon nut M 10

Washer 10.5

Console

3 x cylinder screw
M 10x35
46 Nm

Z 05 Starter

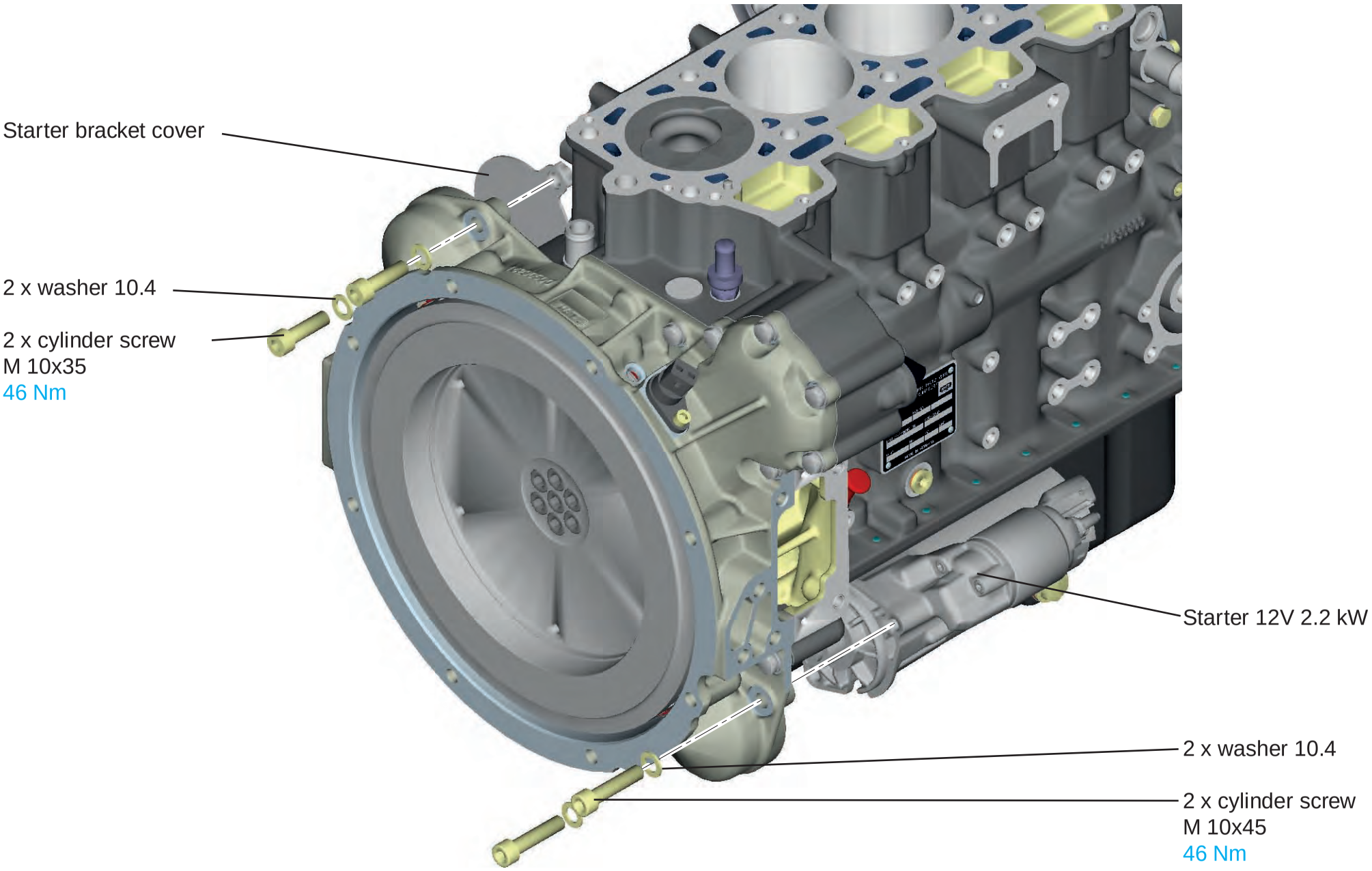
Starter bracket cover
2 x washer 10.4
2 x cylinder screw
M 10x35
46 Nm
Starter 12V 2.2 kW
2 x washer 10.4
2 x cylinder screw
M 10x45
46 Nm

Z 06 Engine base

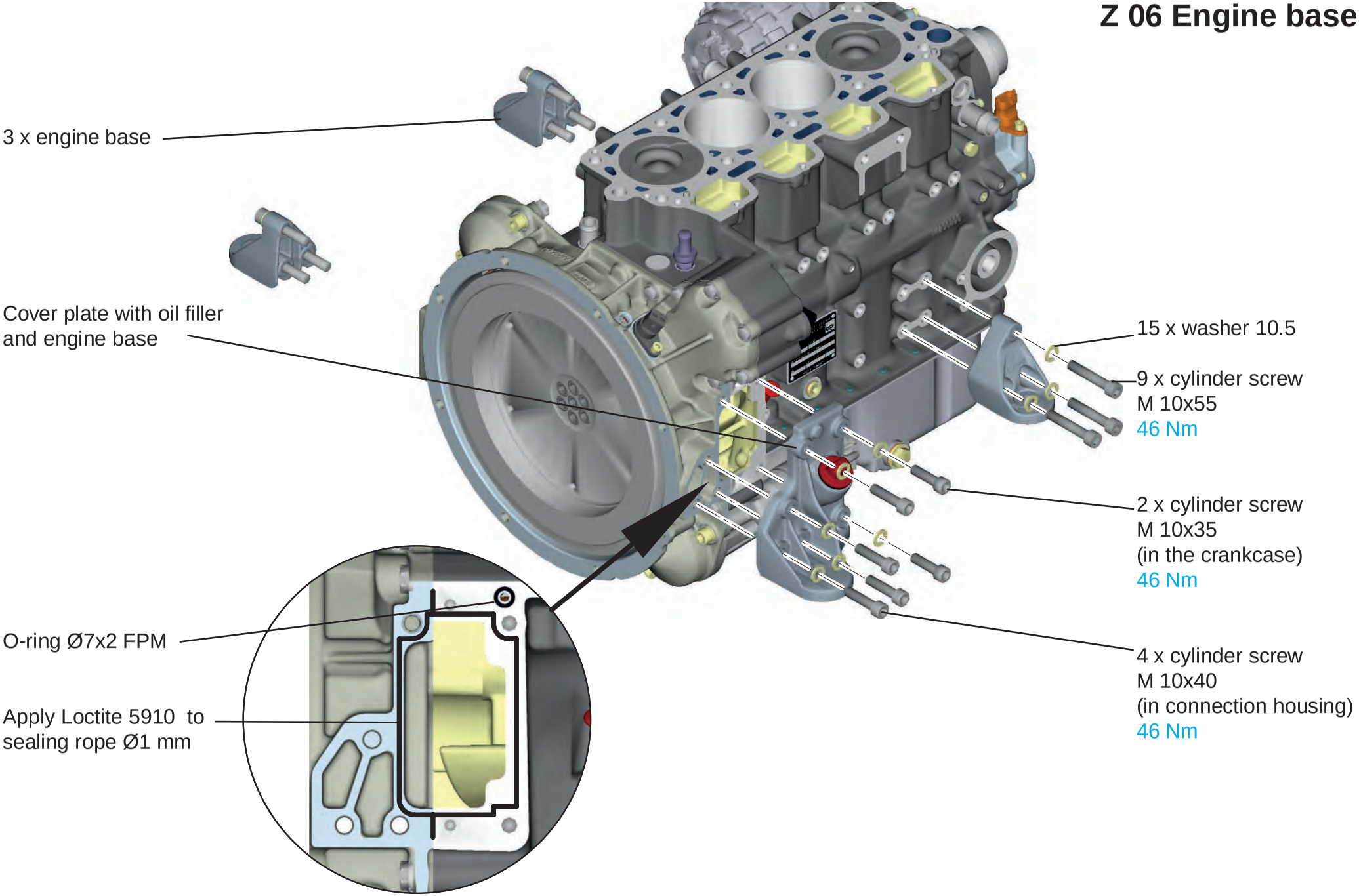

Z 07 Oil cooler

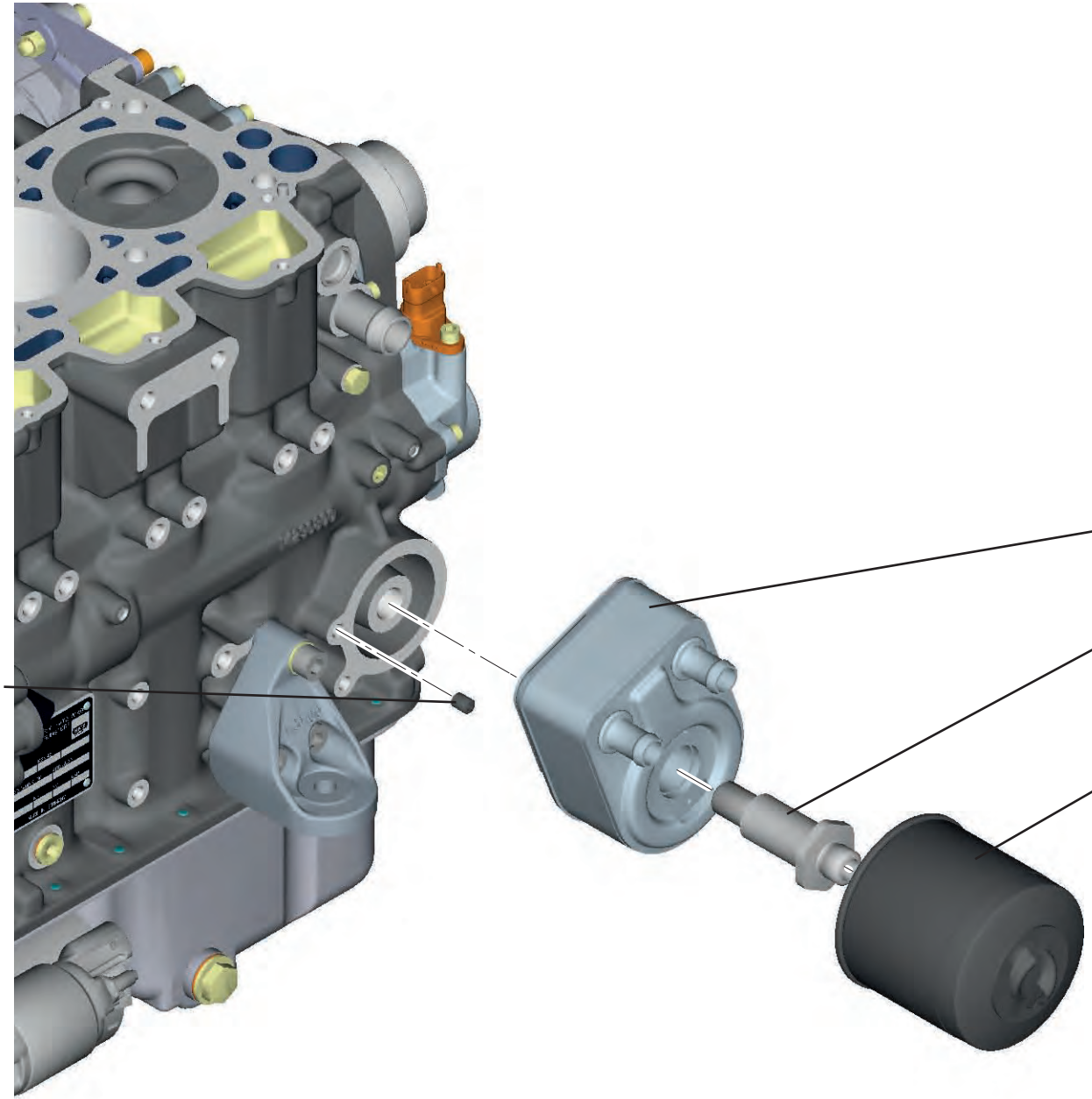

Z 07 Oil cooler

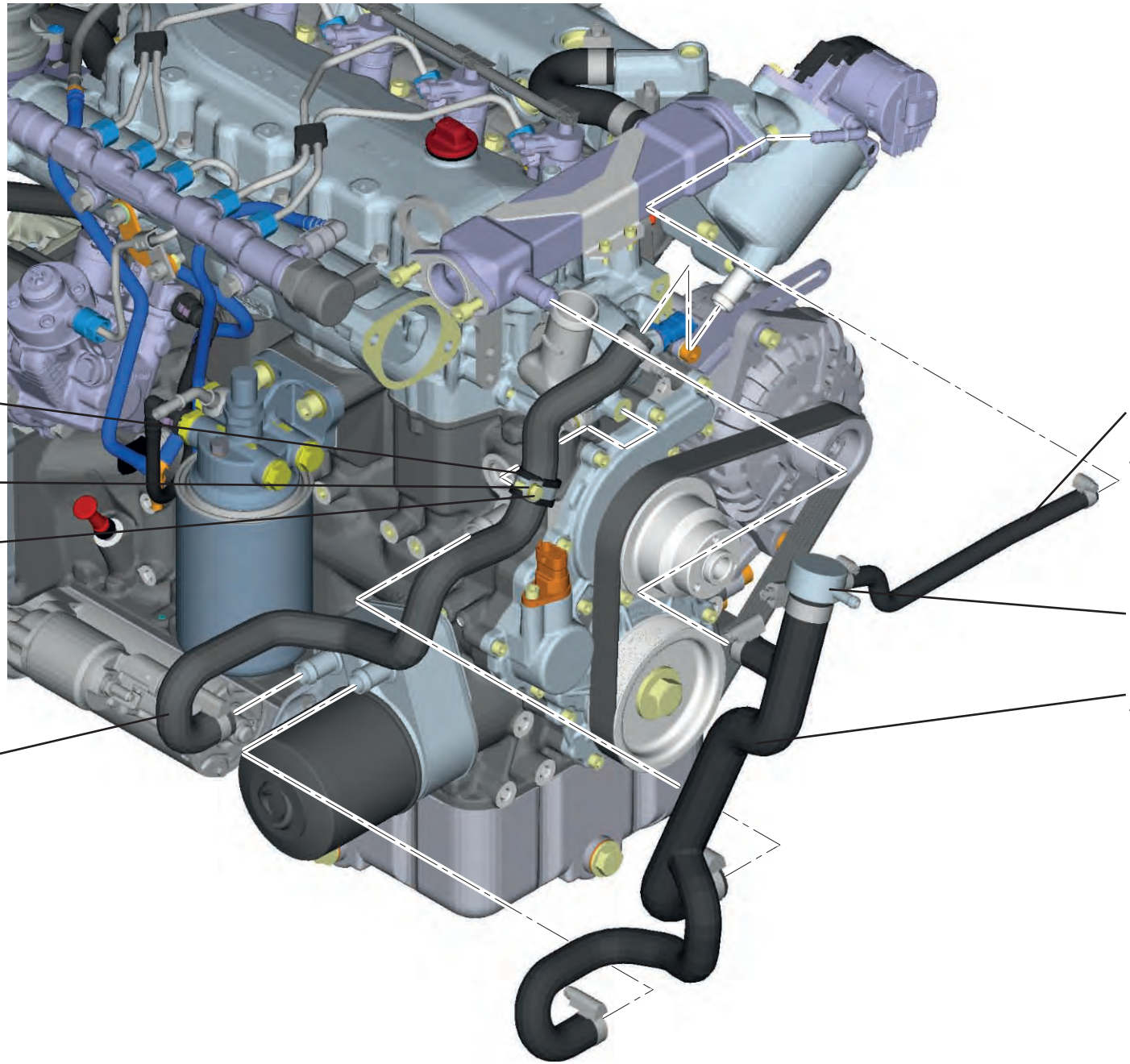

Pipe clamp
RSGU 1.25/15

Washer 6.4

Hexagon bolt
M 6x16
9.5 Nm

Shaped hose piece
16 x 4.5
fastened with
2 x hose clamp
DIN 3017-A 12-22x9
3 Nm

Shaped hose piece
8 x 3
fastened with
2 x hose clamp
DIN 3017-A 10-16x7.5
1.5 Nm

Distributor

Shaped hose piece
fastened with
2 x hose clamp
DIN 3017-A 12-22x9
3 Nm
1 x hose clamp
DIN 3017-A 16-27x12
5 Nm
1 x hose clamp
DIN 3017-A 20-32x13
5 Nm

Z 30 Fan

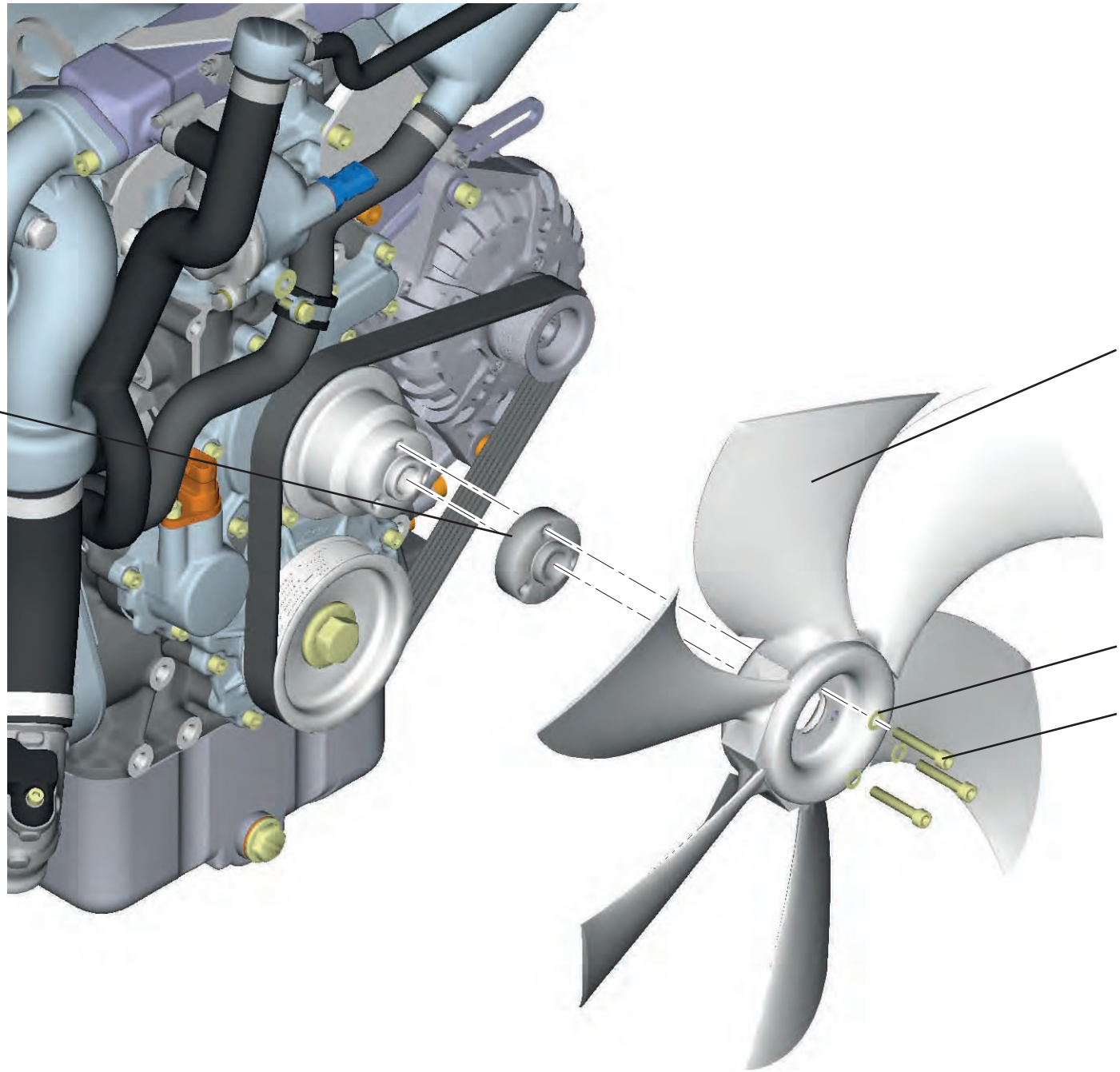
Spacer for fan
Exhaust fan
3 x spring washer A 6
3 x cylinder screw
M 6x35
9.5 Nm

3. Basic engine equipment

M 01 Cylinder crankcase

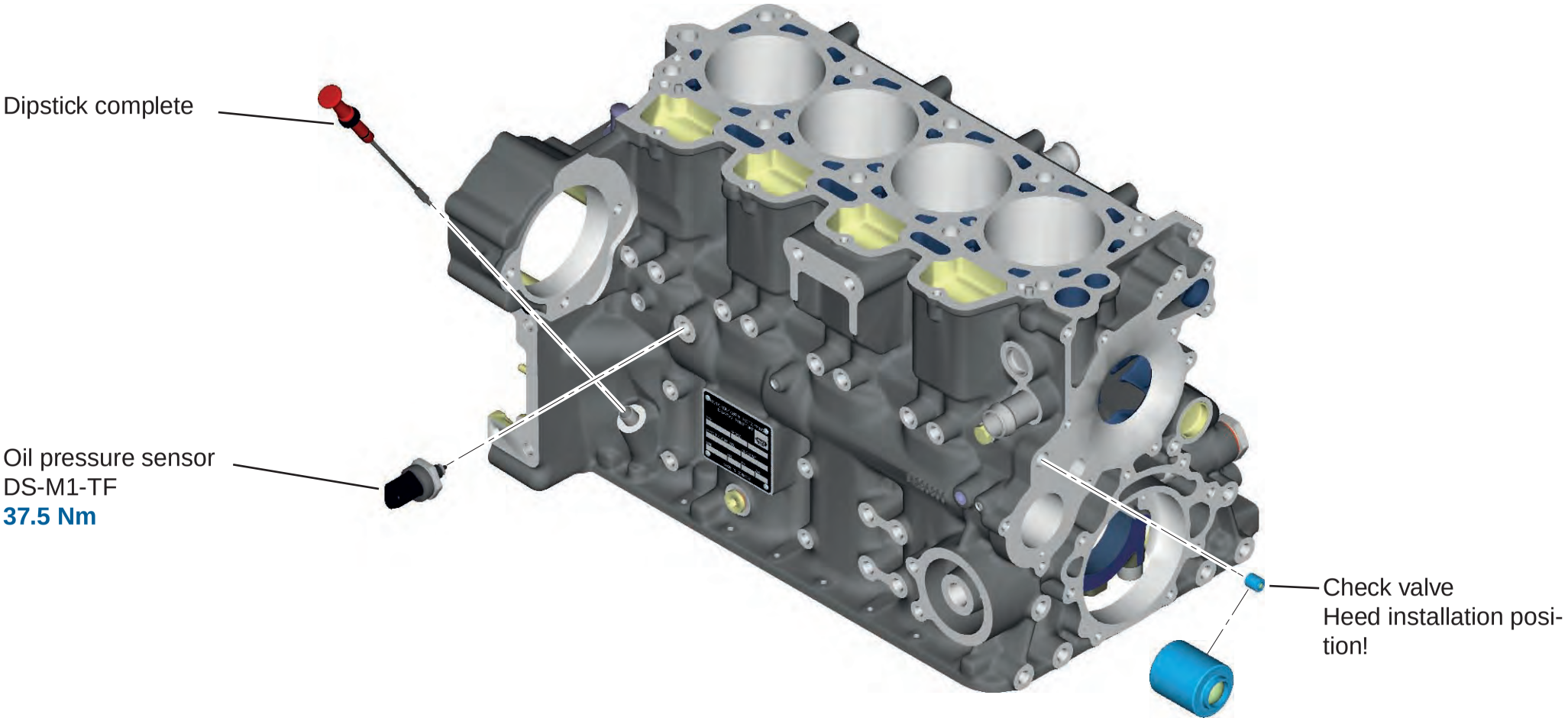

M 01 Cylinder crankcase

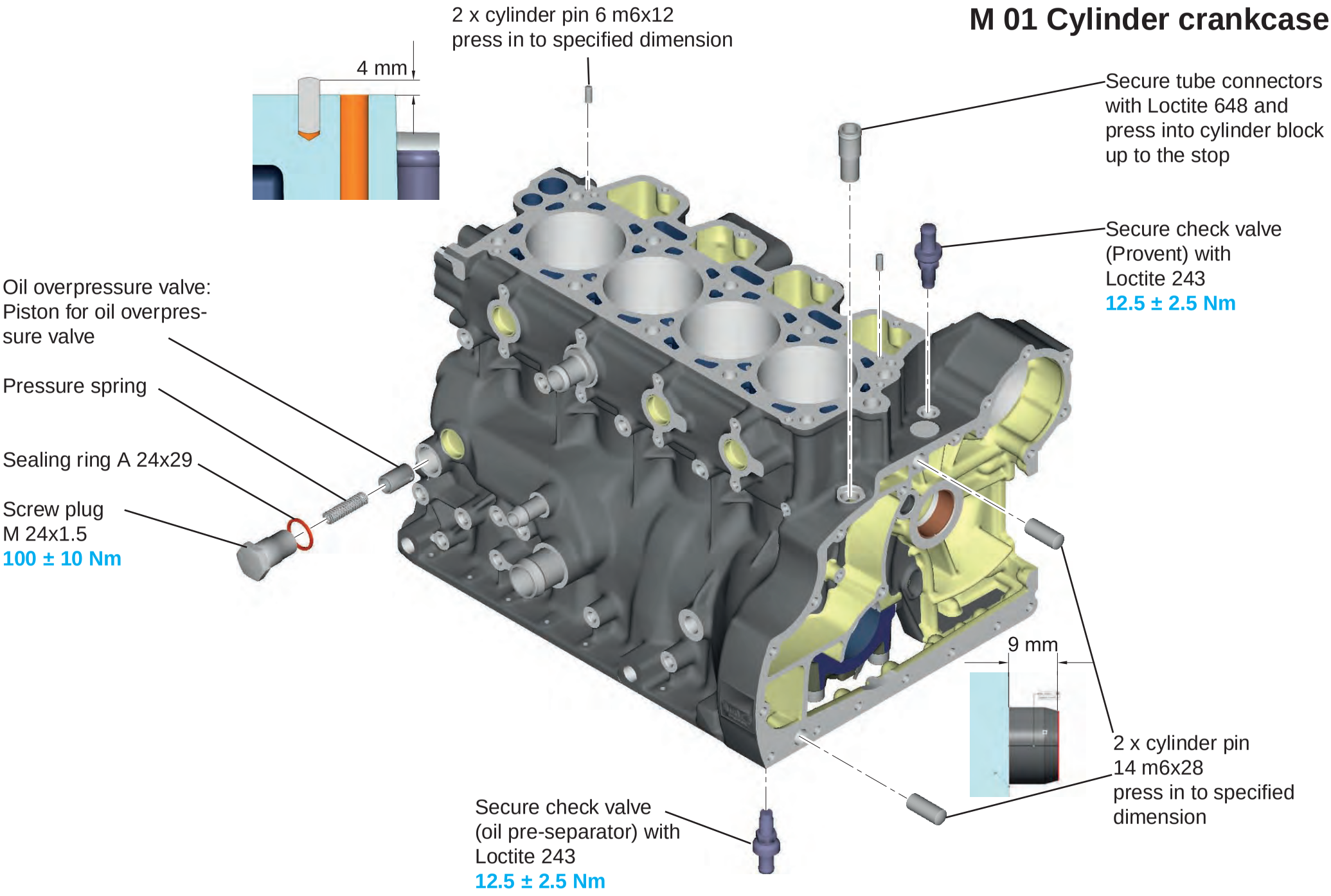

M 01 Cylinder crankcase

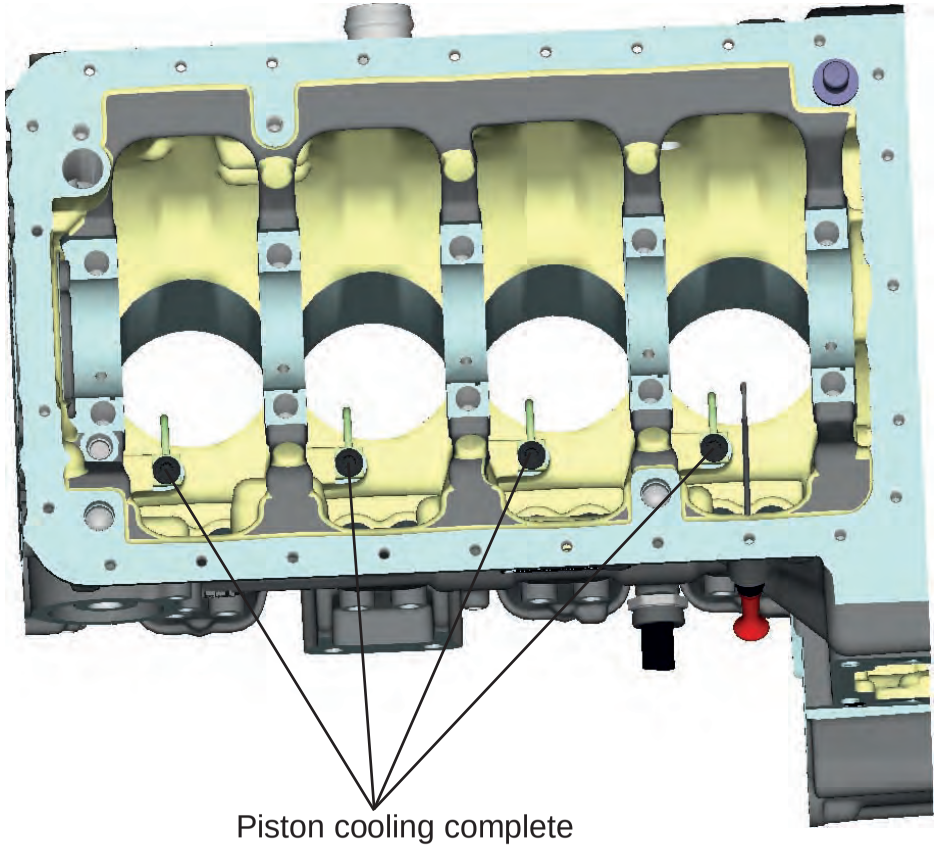

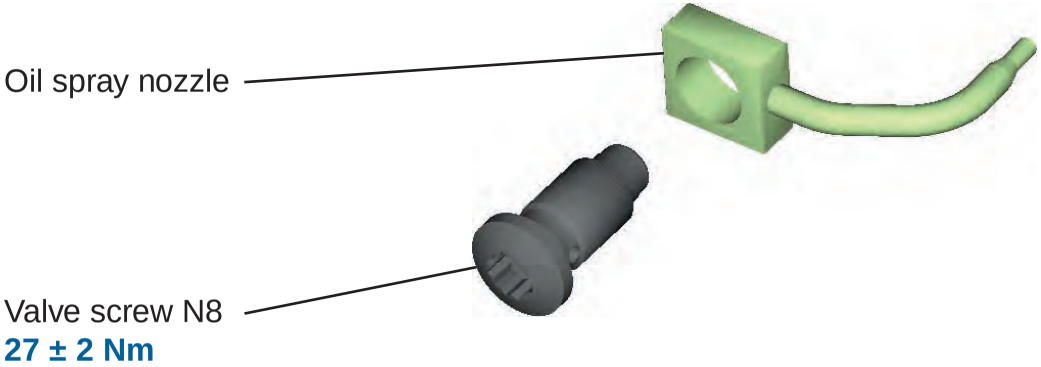

M 02 Crankshaft

Insert main bearing halves into cylinder block main bearing bracket and moisten with engine oil.

Heed the correct position of the oil holes and the position groove.

Insert thrust washer with grease.
Oil pockets point to the crankshaft sliding surfaces!

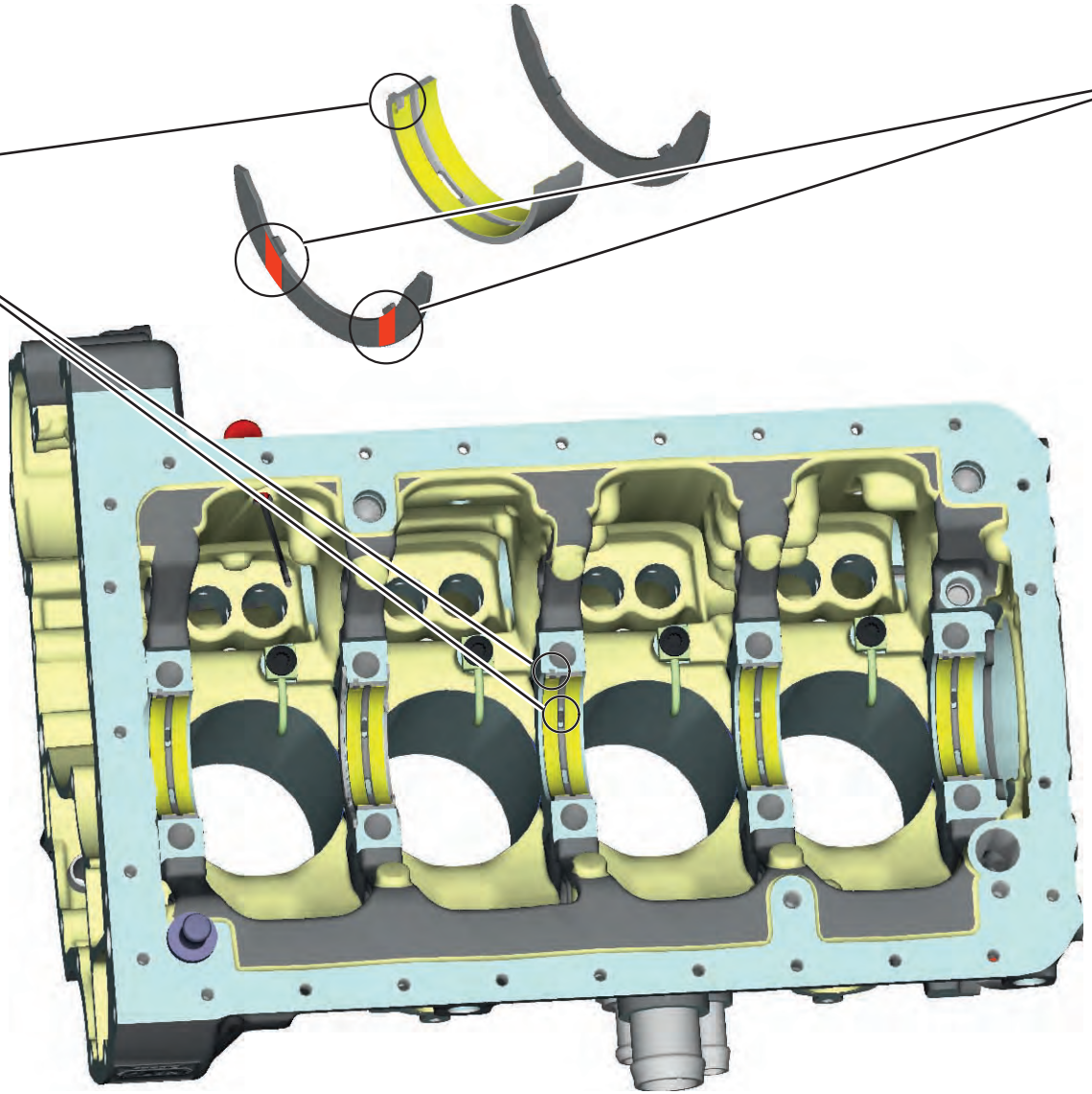

M 02 Crankshaft

Thread crankshaft into cylinder block.

Ensure axial play of the crankshaft through correct mounting of the main bearing bracket with thrust washers.

Before tightening the screws on the main bearing bracket, put the crankshaft and the main bearing bracket in the specified direction to the system.

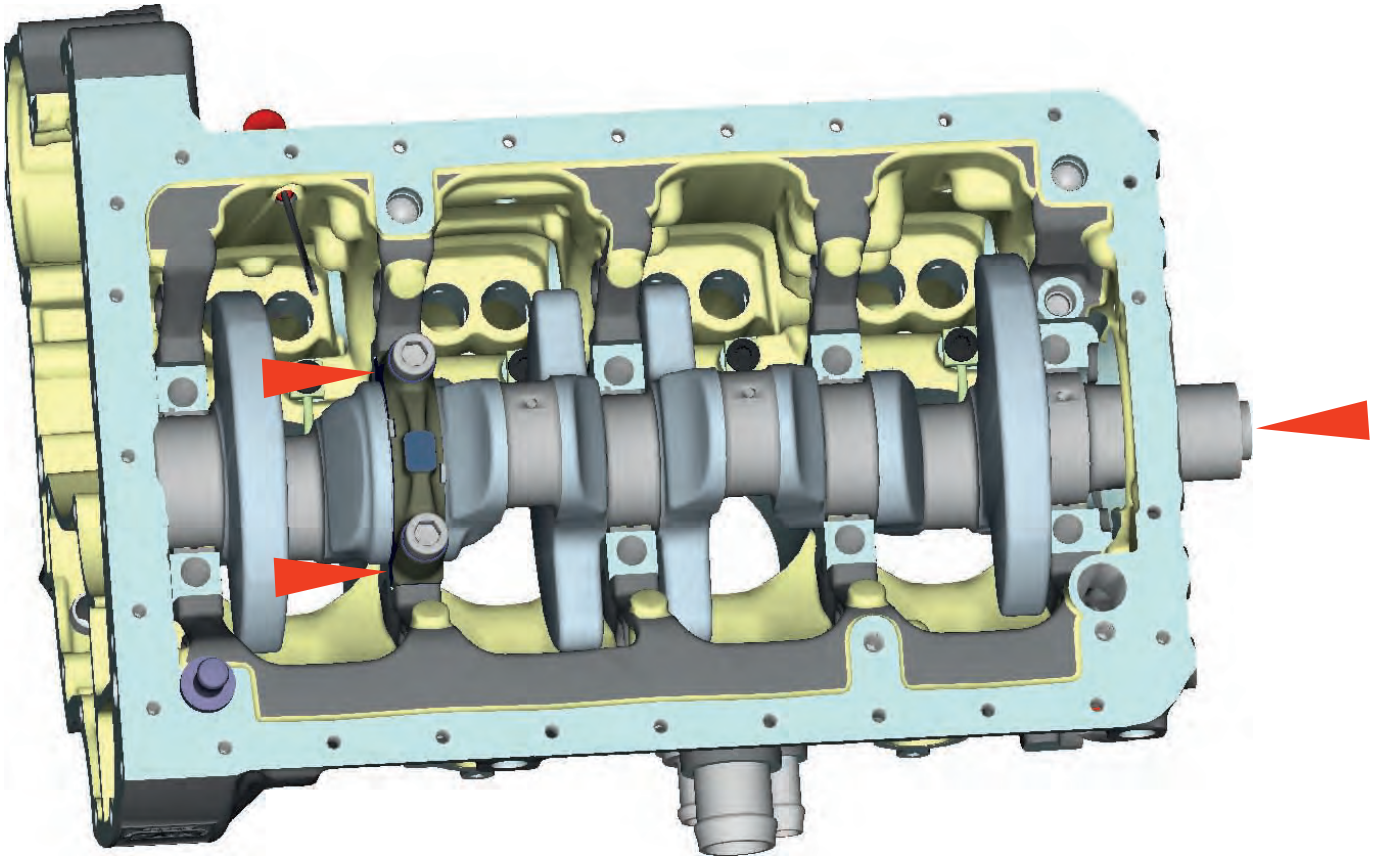

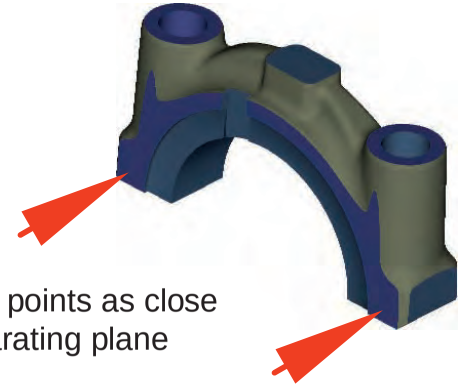

Force transmission points as close as possible to separating plane

M 02 Crankshaft

Tighten main bearing bracket in the specified sequence.

Tightening torque:

1st level:	10 Nm
2nd level:	45 Nm
3rd level:	90 Nm

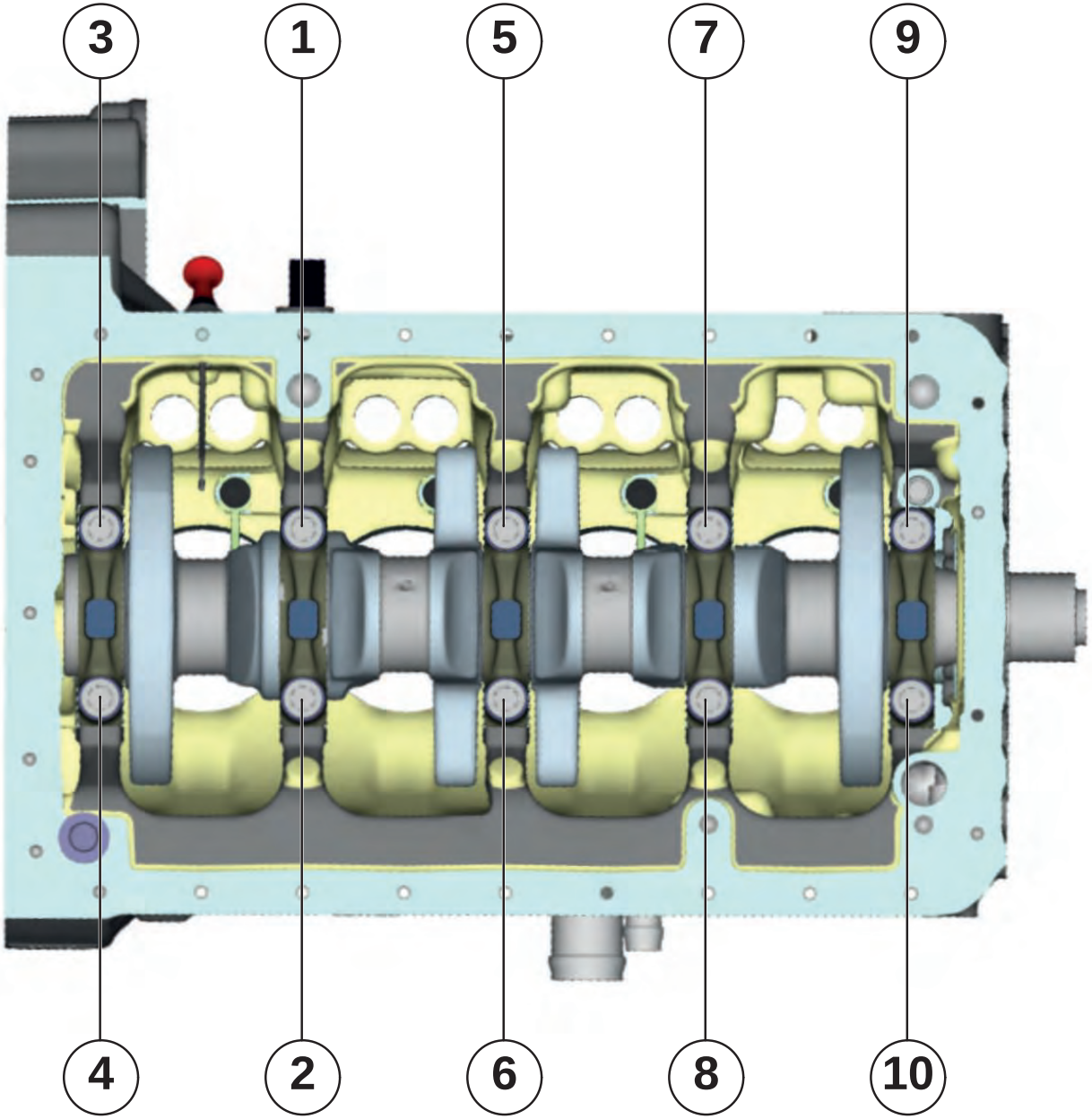

M 04 Camshaft

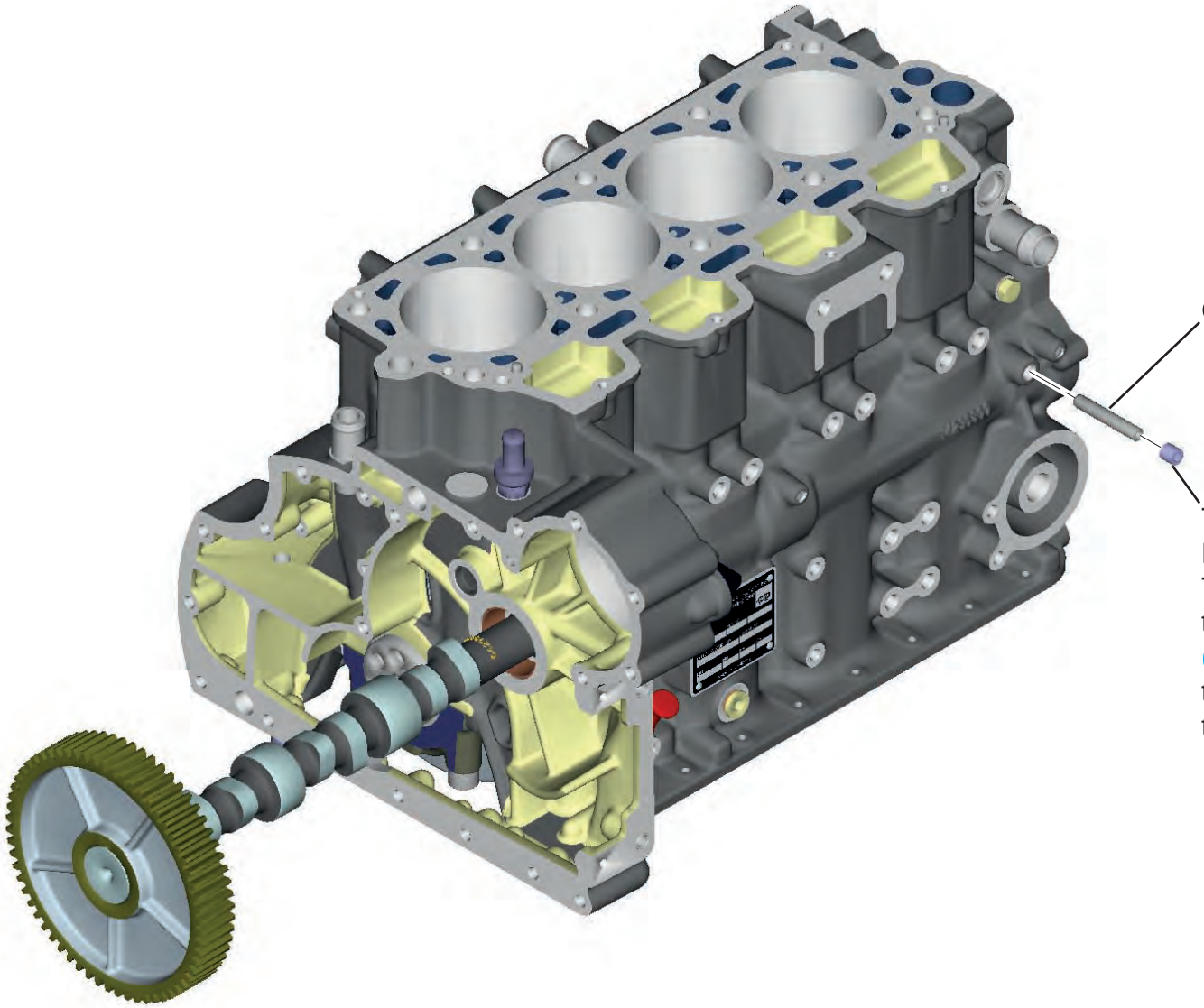

Grease camshaft bearing points with engine oil and insert camshaft into cylinder block.

M 02 Crankshaft gear wheel

Place crankshaft gear wheel on crankshaft, heeding the correct positioning of the markings!

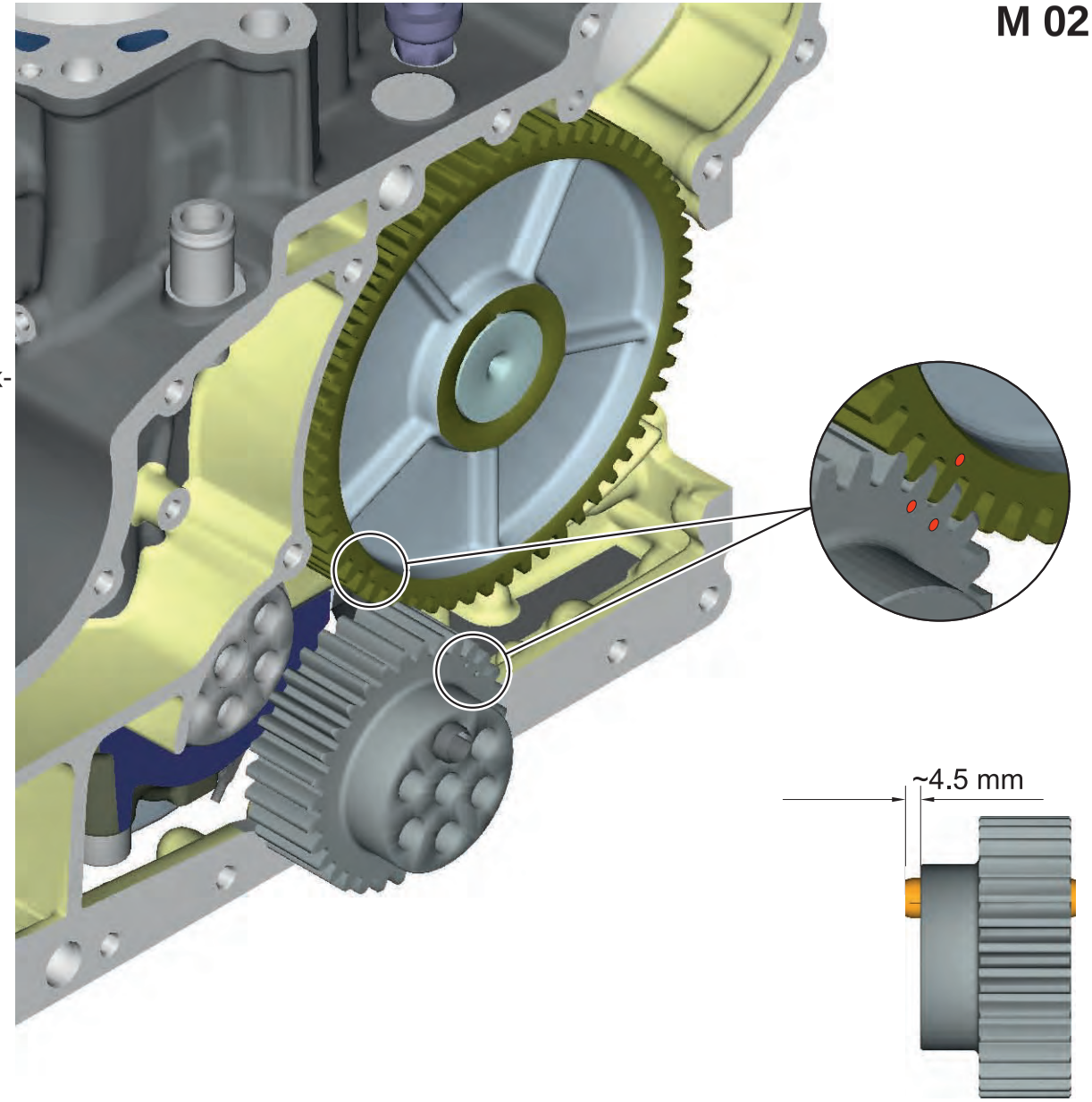

Press spring pin into crankshaft gear wheel to specified dimension.

M 01 Connector housing

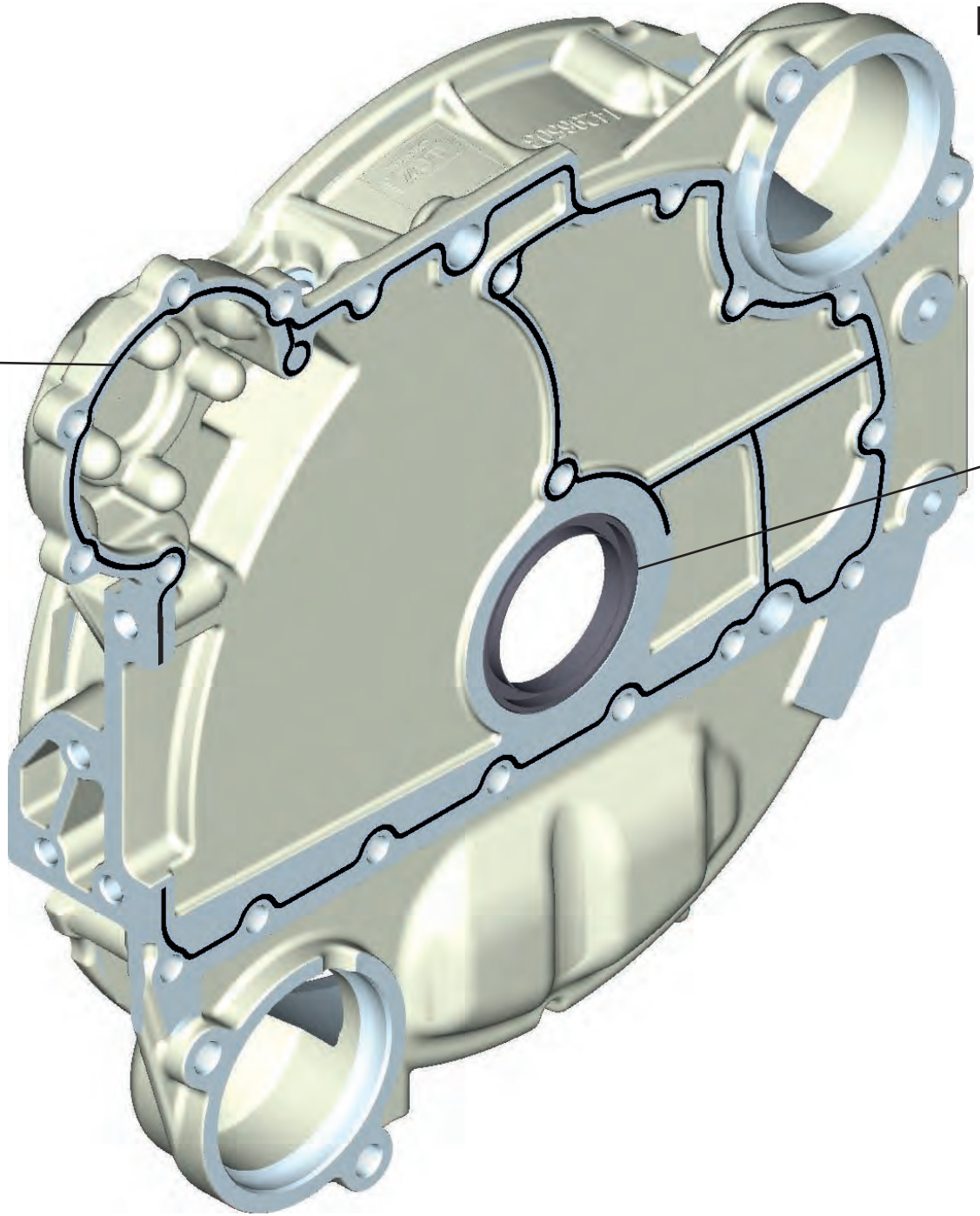

Apply sealing agent Loctite 5910 according to the black curve.

WDRI 55x70x8
Oil slightly and press in until flush with flange surface

M 01 Connector housing

Place connector housing on cylinder block and tighten slightly by hand with the three screws **1**.
Screw special tool onto cylinder block **2** (23 Nm)
Screw special tool onto connector housing **3** (23 Nm);
this aligns the flange surface.
Tighten only the three screws **1** with 10-12 Nm.
Loosen screws **3** in order to avoid distortion, tighten all 19 combi screws (23 Nm).
Tighten special tool with screws **3** again (camshaft / crankshaft is blocked).

19x combi screw
ISO 10644 (ISO 4017 + 10673 N)
M 8x25 - 8.8 - A3B
23 Nm

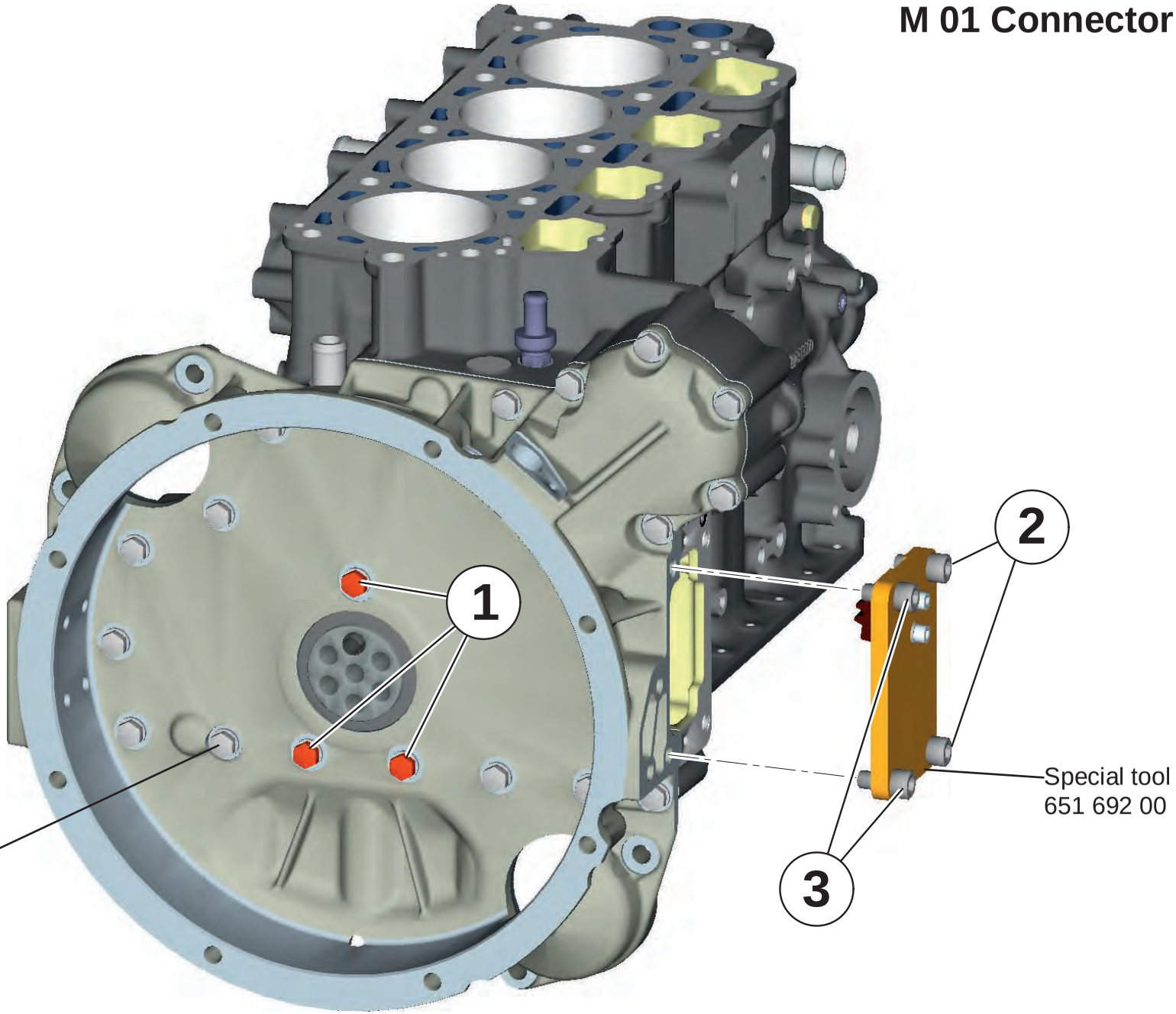

M 17 Flywheel

Caution!

Remove speed sensor before dismounting the flywheel and only install after mounting the flywheel; otherwise it can be damaged by the sprocket.
Keep soiling to a minimum!
Front side is magnetic! Avoid contact with iron particles!

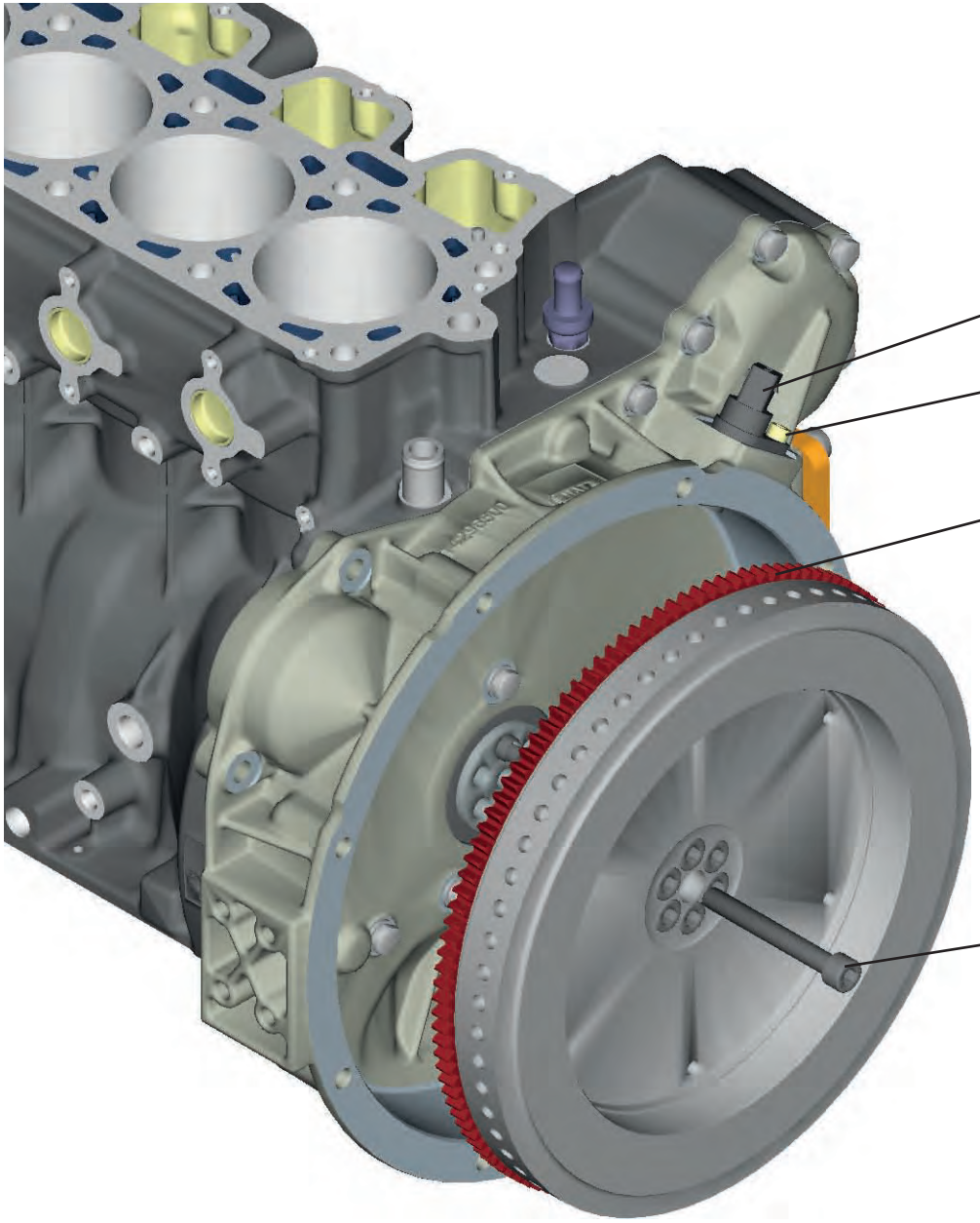

Speed sensor
DG6-S for flywheel

Cylinder screw M 6x20 8.8
9.5 Nm

Sprocket
Mount in correct position at approx. 250°C (beveled side of the teeth must point in the direction of the starter)

7x cylinder screw
M 10x1x80 12.9
95 Nm

M 10 Oil pump

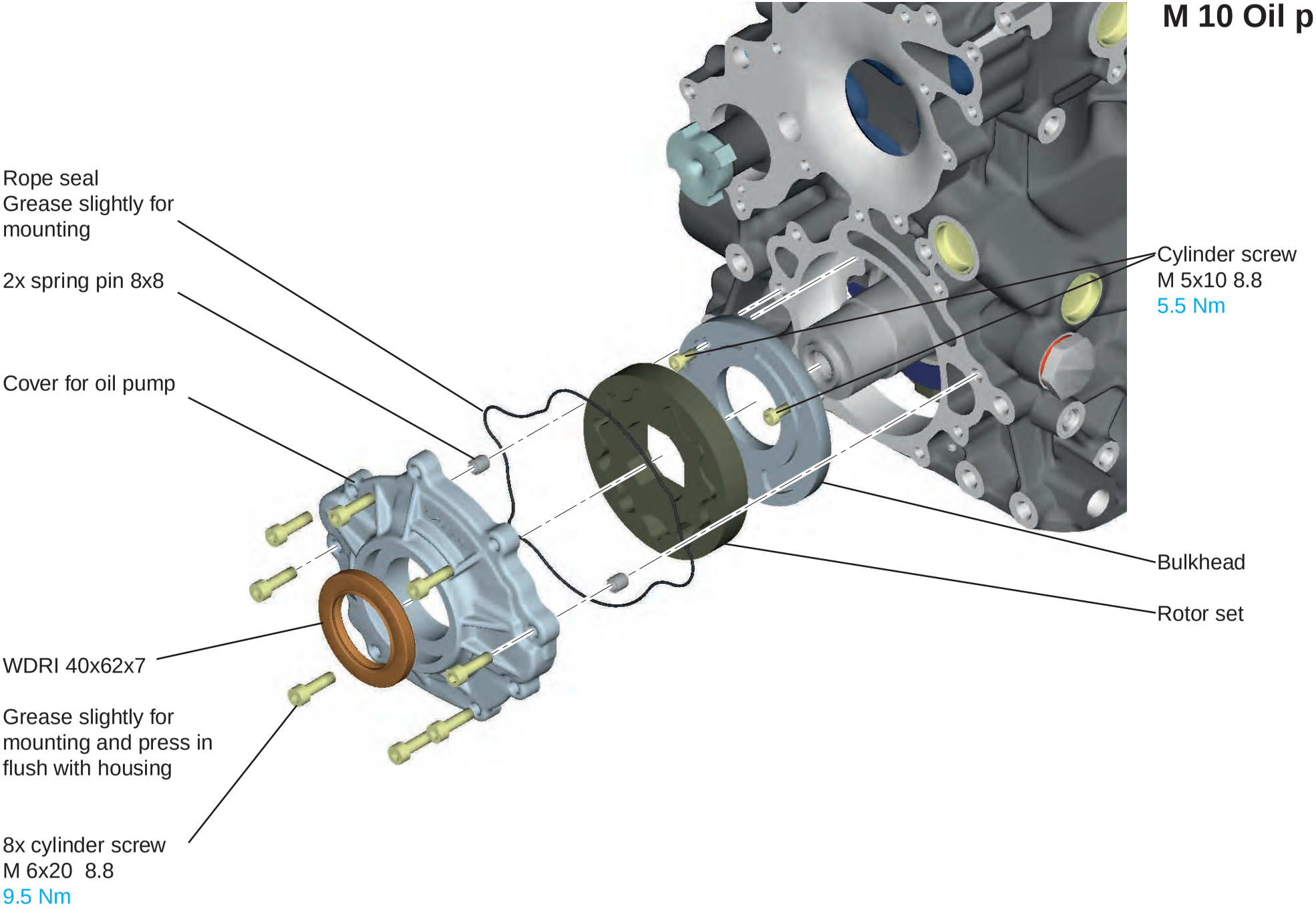
Rope seal
Grease slightly for mounting
2x spring pin 8x8
Cover for oil pump
WDRI 40x62x7
Grease slightly for mounting and press in flush with housing
8x cylinder screw
M 6x20 8.8
9.5 Nm
Cylinder screw
M 5x10 8.8
5.5 Nm
Bulkhead
Rotor set

Z 30 Pulley

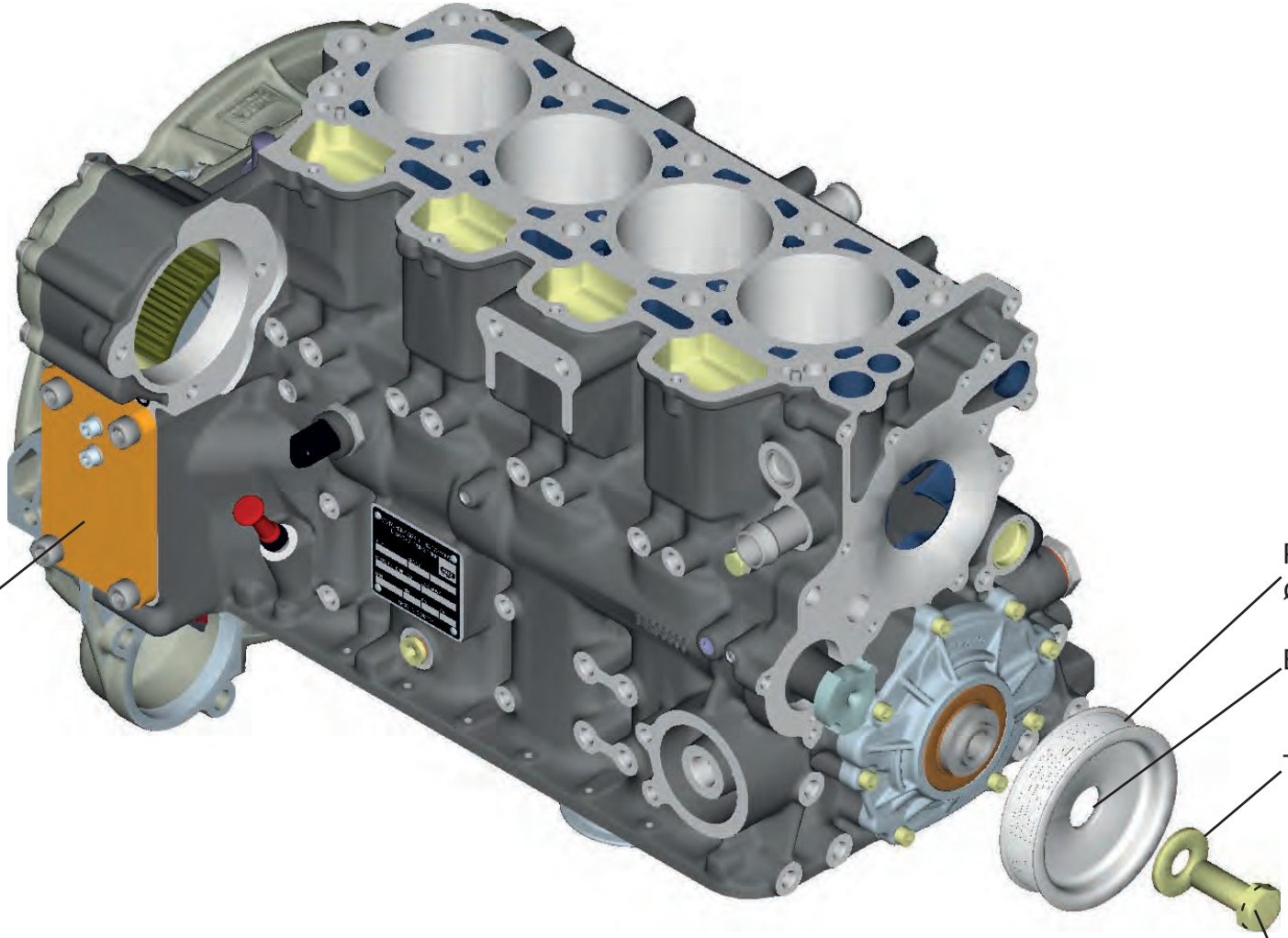
Special tool
651 692 00
Remove after tighten-
ing the pulley.
Pulley crankshaft
ø103 PK6
Bevel to the crankshaft
Tension washer 16
Cylinder screw
M 16x1,5x40 LH
Left thread!
200 Nm

M 05 Piston and conrod

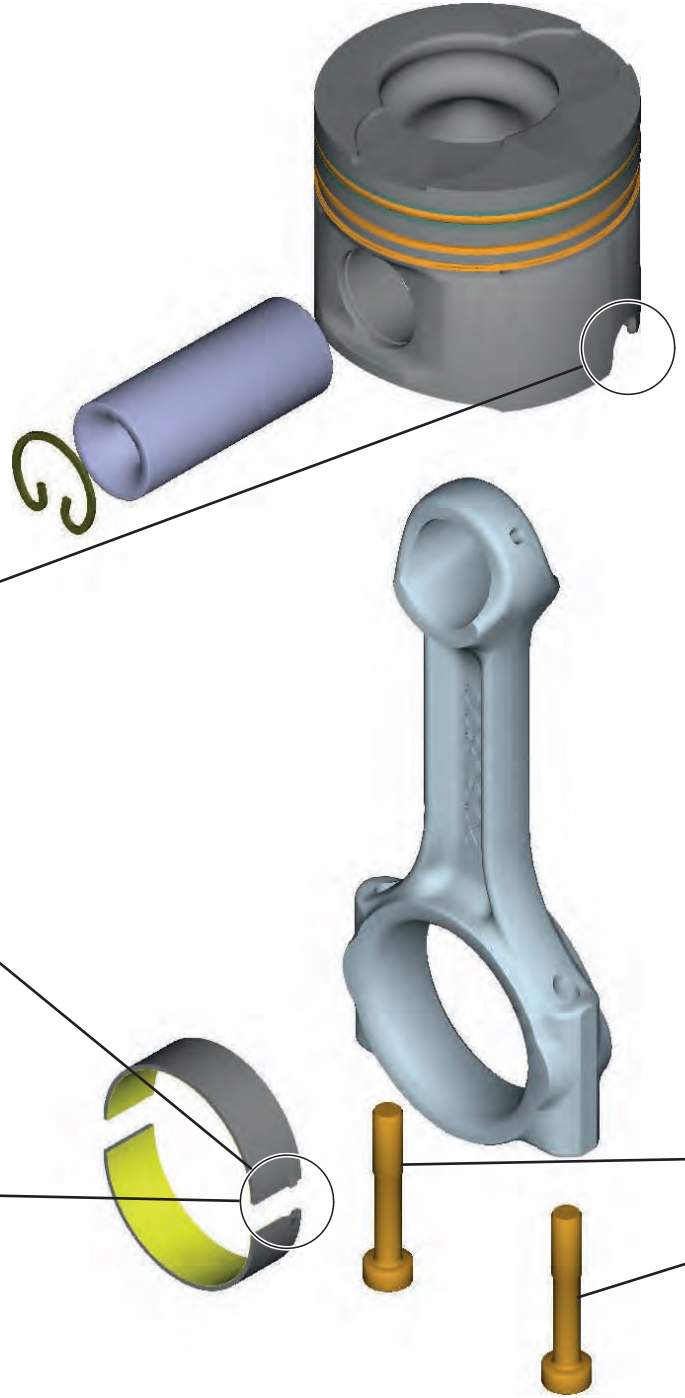

Mount piston in cylinder block with help of the piston ring collet chuck 626 383 00 (heed notch for oil spray nozzle).

Connect piston to con-rod, position grooves of the conrod bearing and notch for the oil spray nozzle on the piston are on the same side!

Mount bearing seats in conrod and oil (position grooves are on the same side)

Tighten conrod screws.
20 Nm + 65°

M 10 Intake manifold

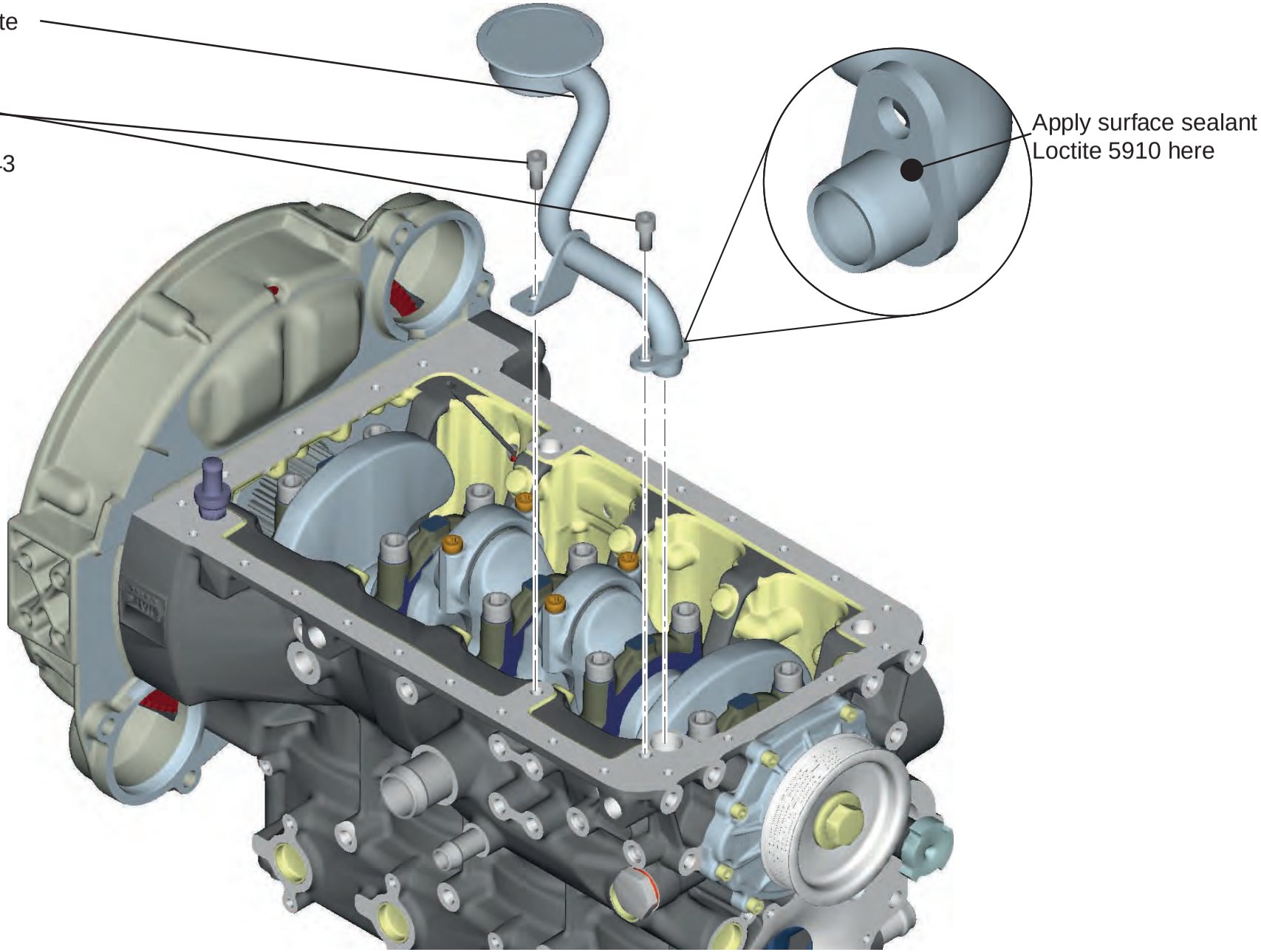

M 01 Oil sump

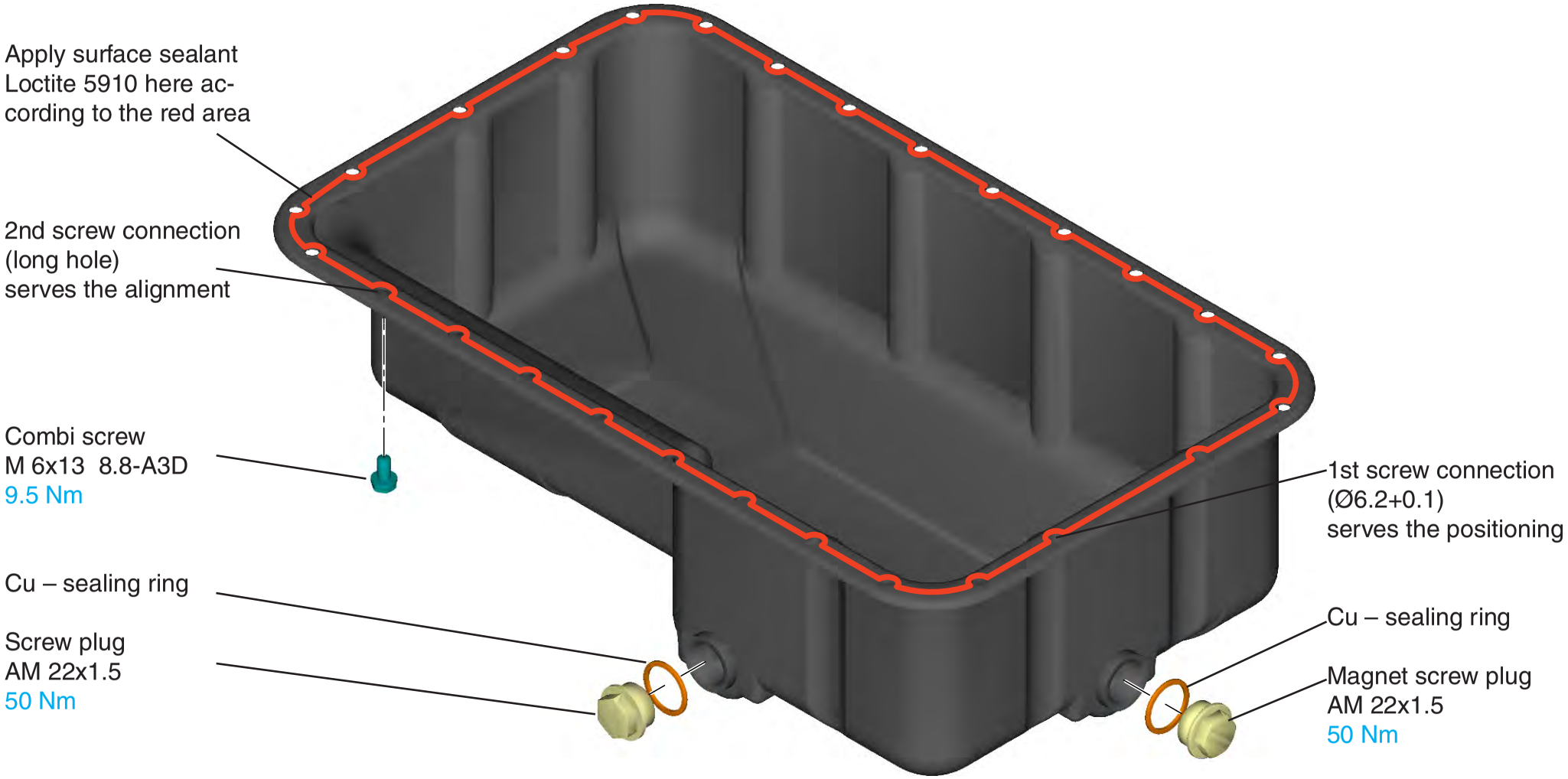
Apply surface sealant
Loctite 5910 here ac-
cording to the red area
2nd screw connection
(long hole)
serves the alignment
Combi screw
M 6x13 8.8-A3D
9.5 Nm
Cu – sealing ring
Screw plug
AM 22x1.5
50 Nm
1st screw connection
(Ø6.2+0.1)
serves the positioning
Cu – sealing ring
Magnet screw plug
AM 22x1.5
50 Nm

M 36 Water pump

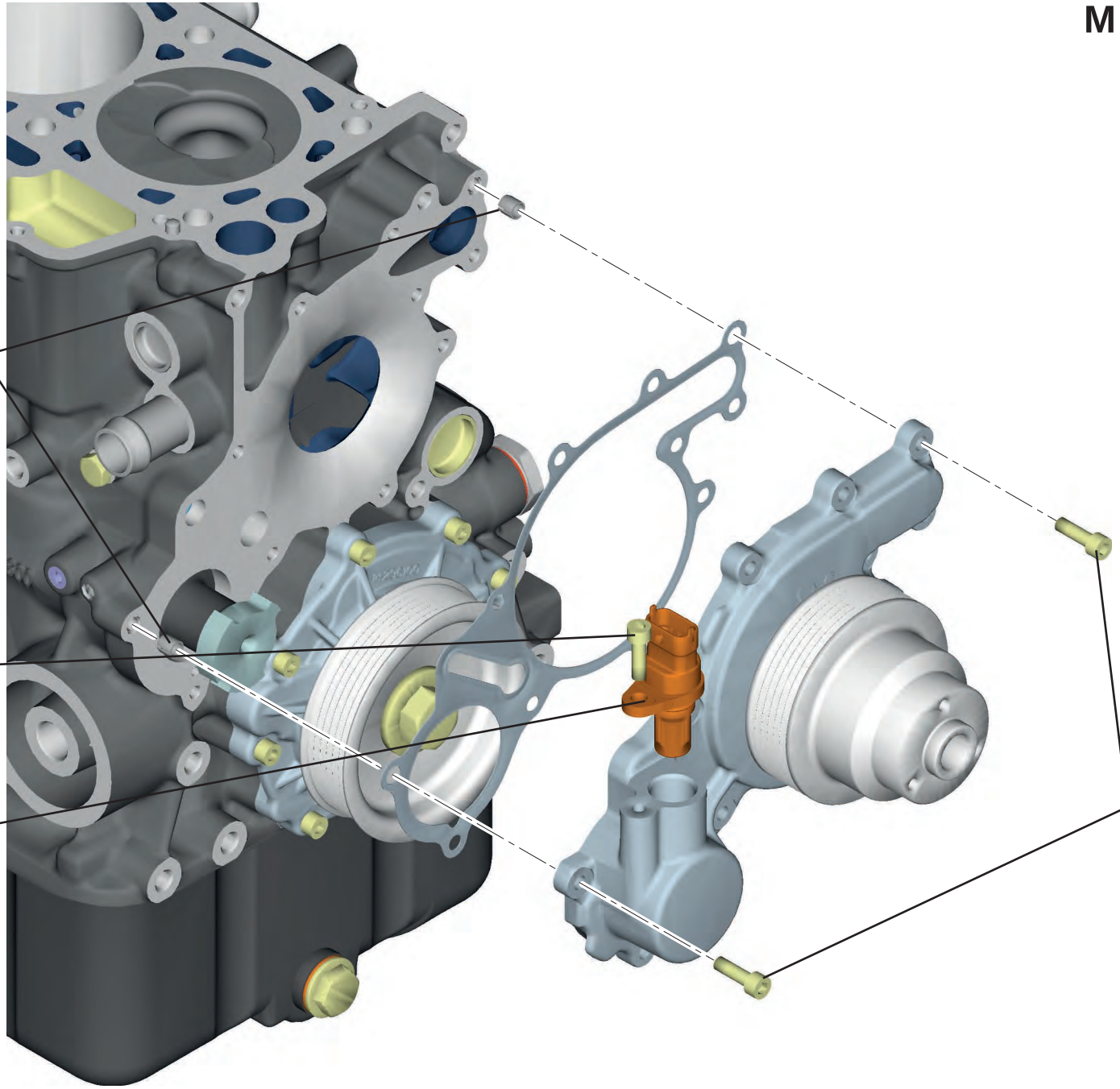

M 01 Roller tappet

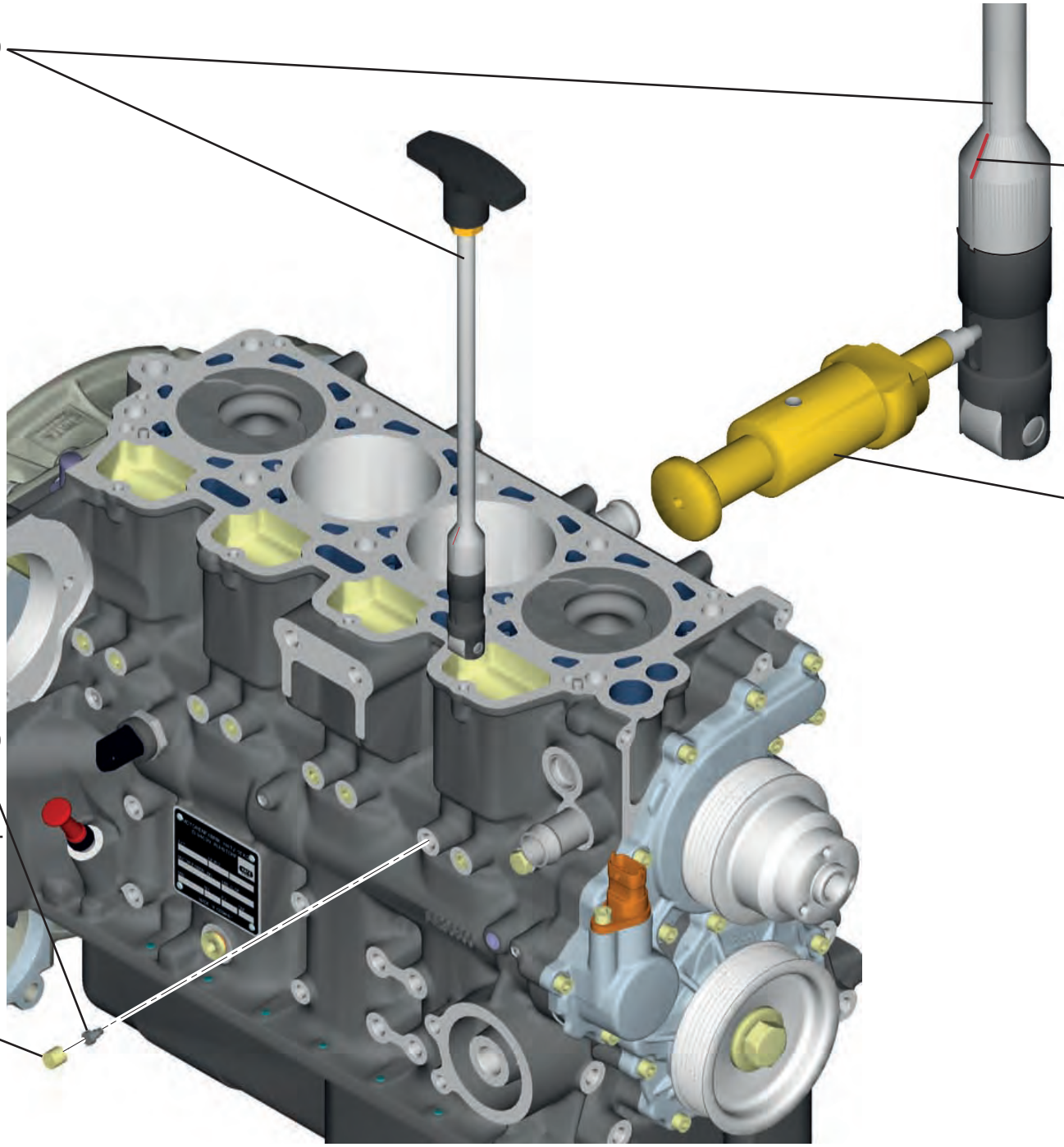

M 07 Cylinder head

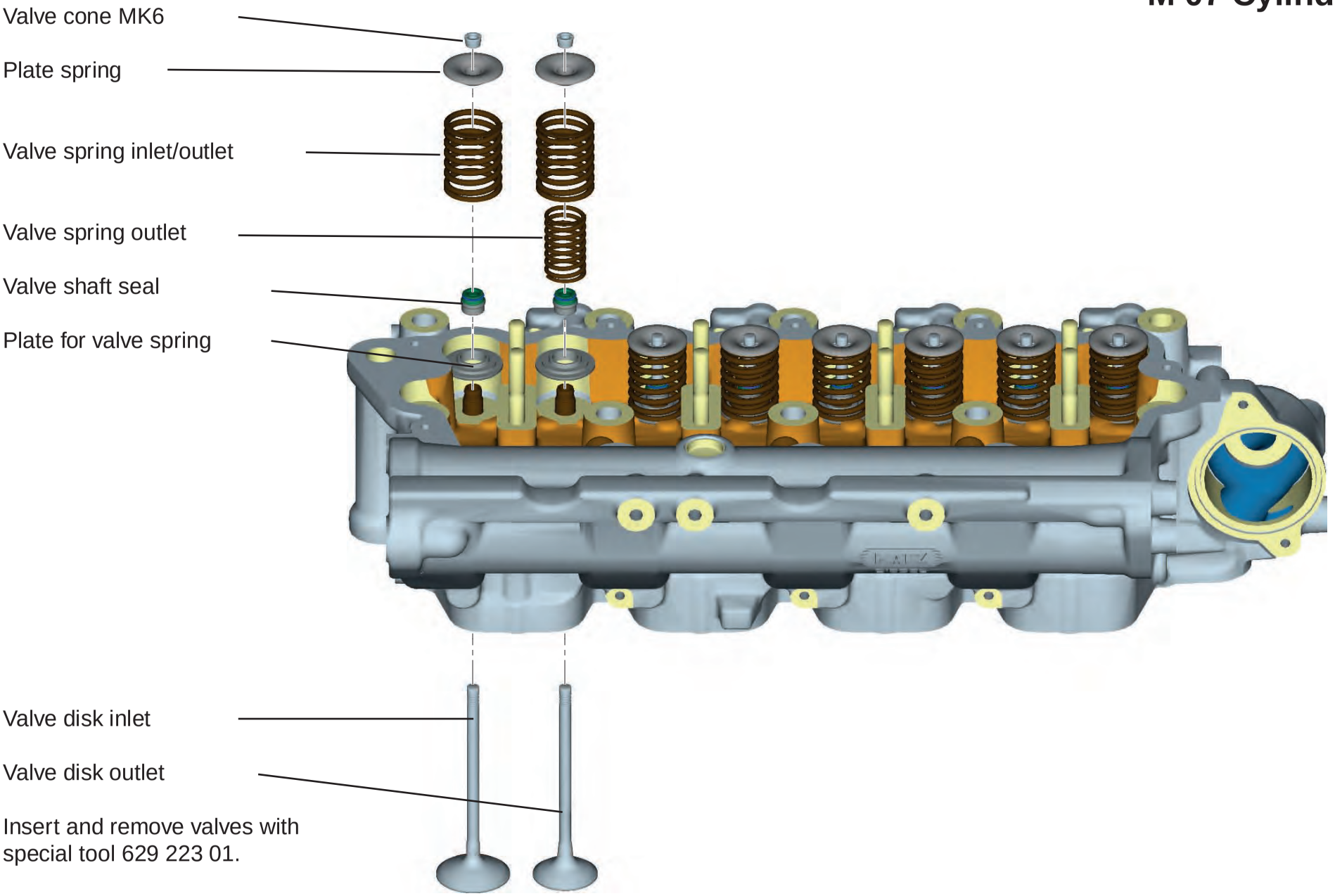

Insert and remove valves with special tool 629 223 01.

Choosing the right cylinder head seal engine H50
Gap 0.6...0.7

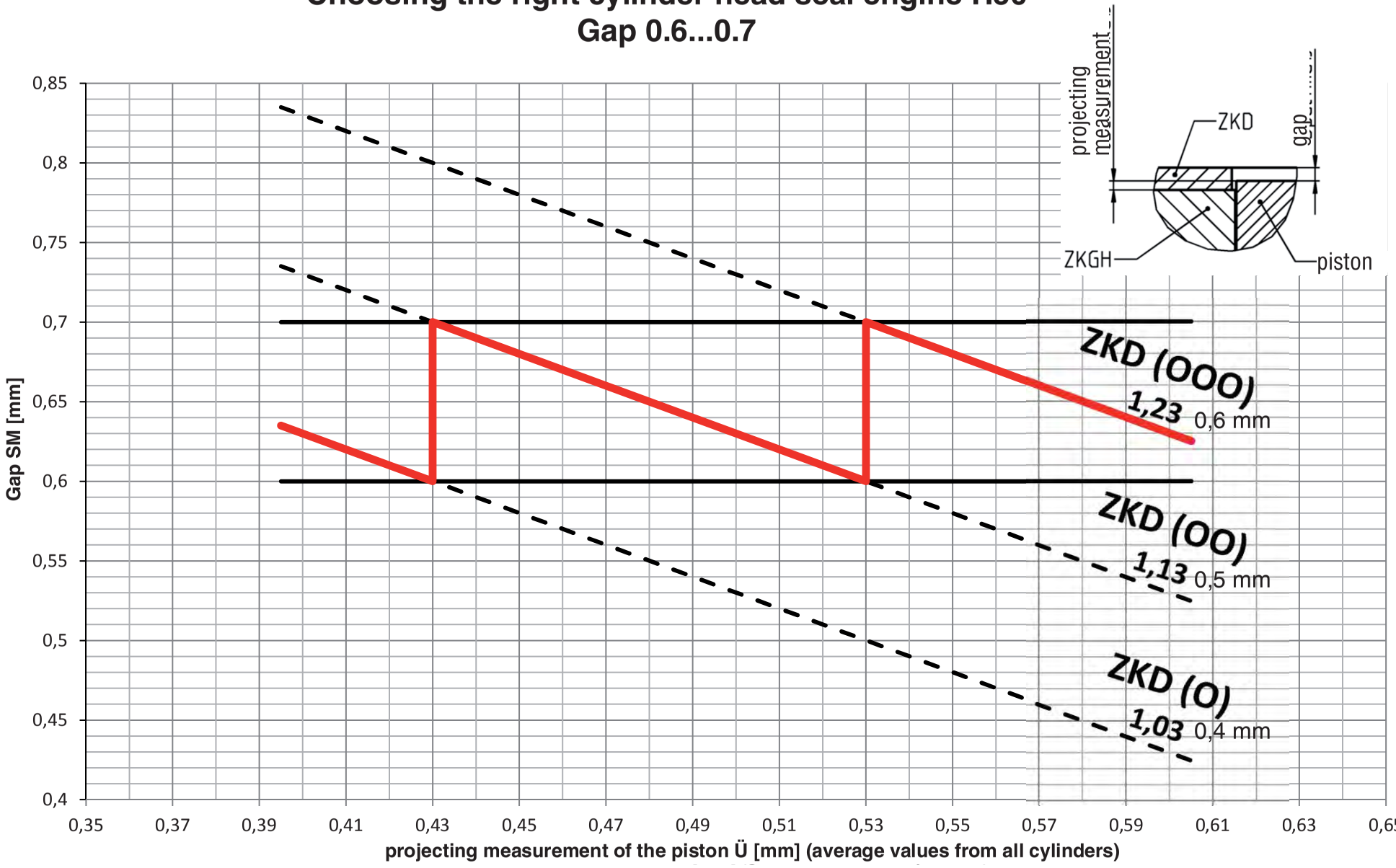

Determine piston protrusion with special tool 653 474 00 and select cylinder head seal according to table.

M 07 Cylinder head

Combi screw
M 12x130
Tightening process
1 - 10
1st stage: 20+2 Nm
2ndstage: 75°+5°
3rdstage: 75°+5°
greased with TA White!

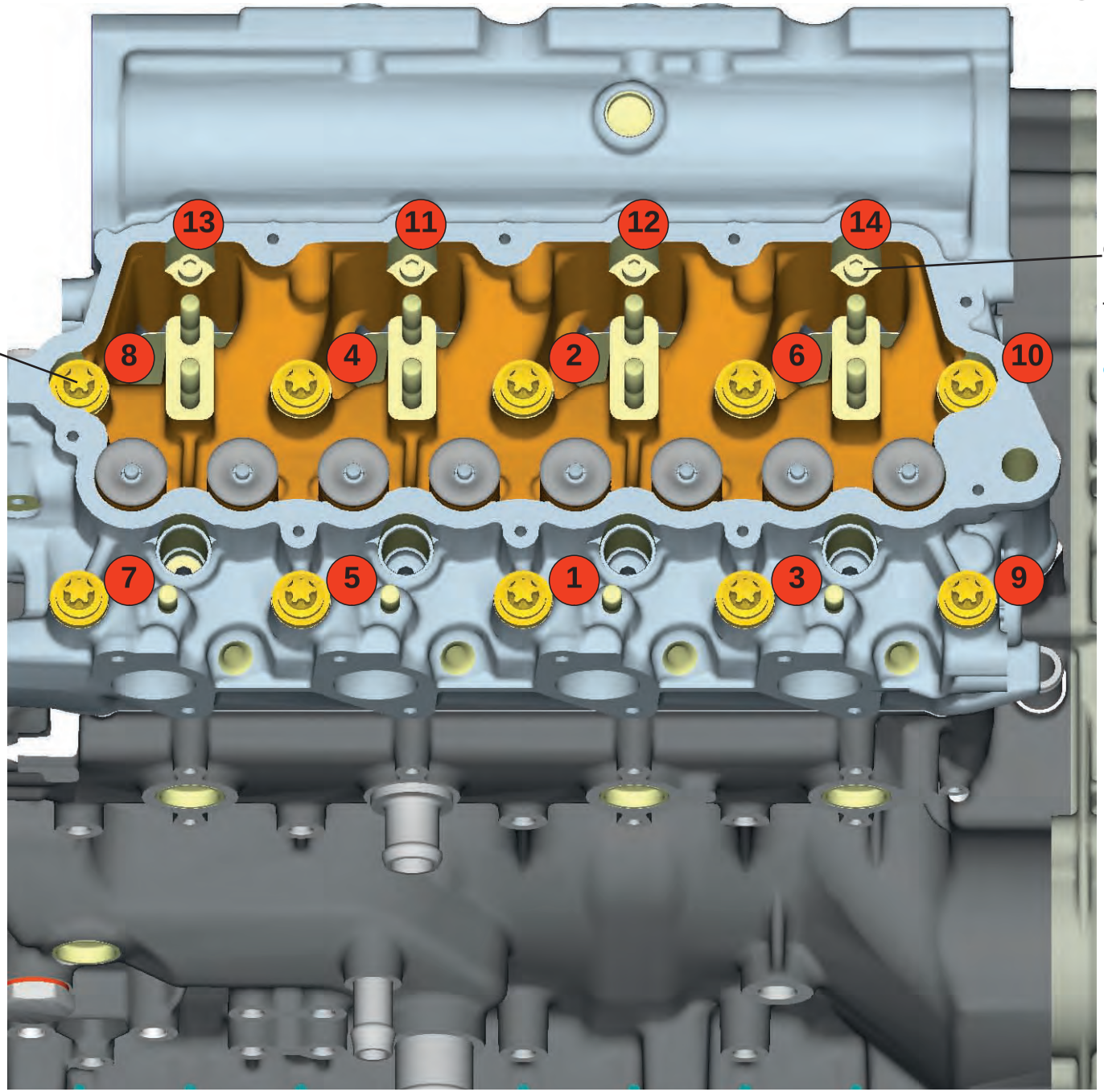

Cylinder screw
M 6x80
Tightening process
11 - 14
9.5 Nm

M 07 Rocker arm

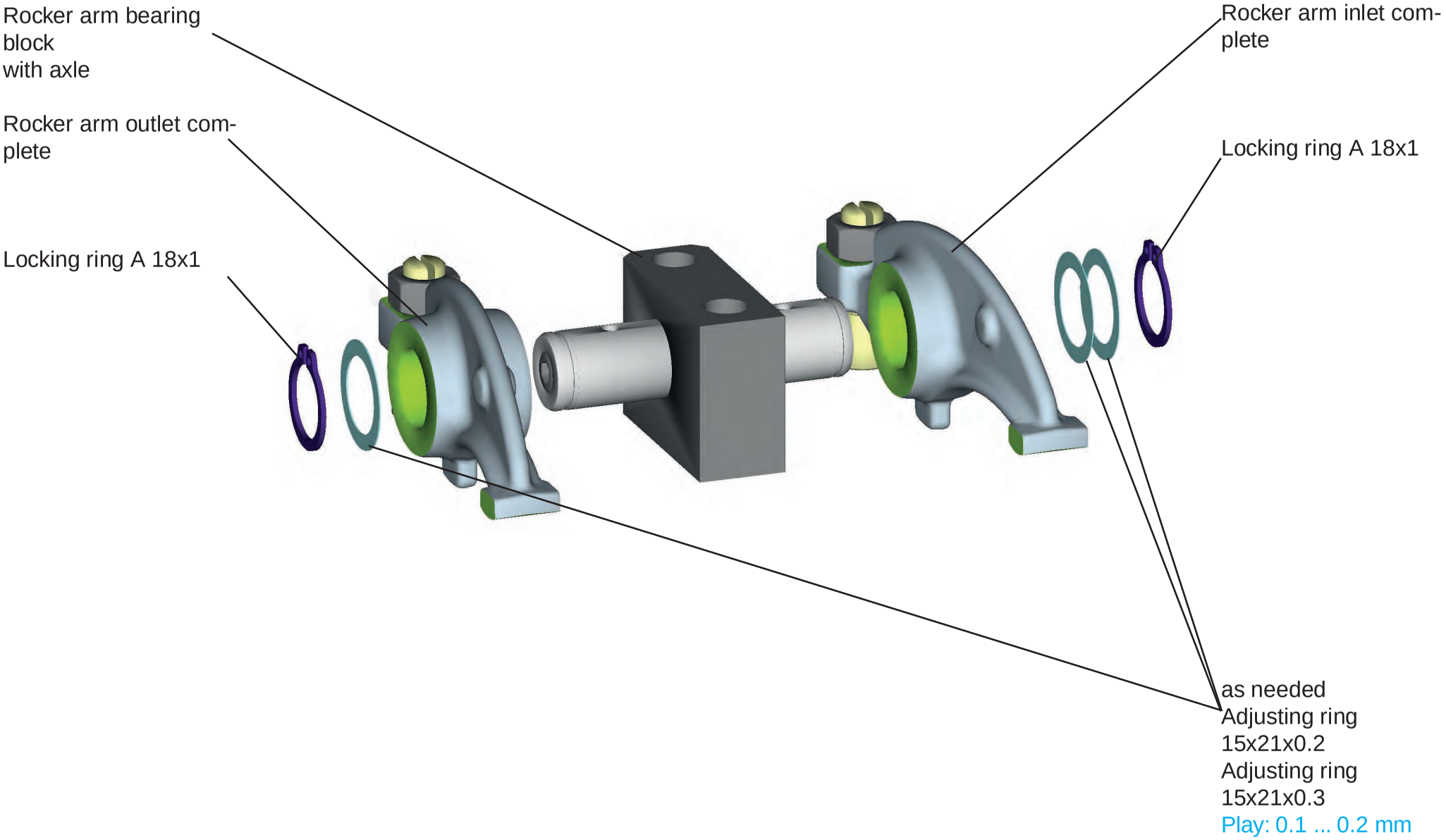

M 07 Rocker arm

Basic setting tappet clearance:
Turn the cylinder to be adjusted in the working cycle.
Loosen the lock nut and turn adjusting screw in until the calotte of the adjusting screw lies against the spherical head of the push rod.
From this position, turn the adjusting screw 1 1/4 turns in and secure with lock nut.

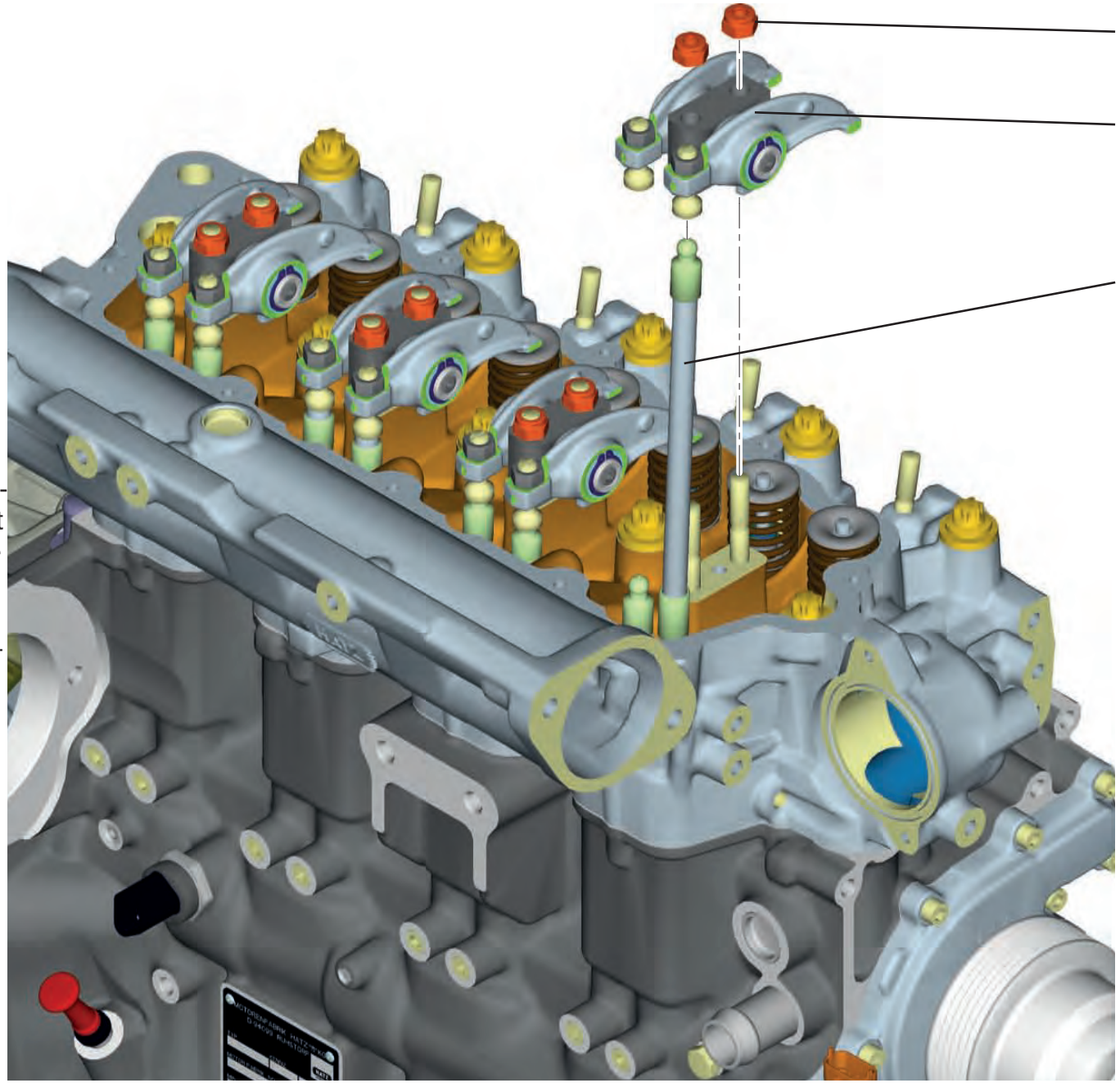

M 08 Cylinder head cover

Hexagon bolt
M 6x20 -F- A3B
9.5 Nm

Cylinder head cover

Paper seal for the
cylinder head cover

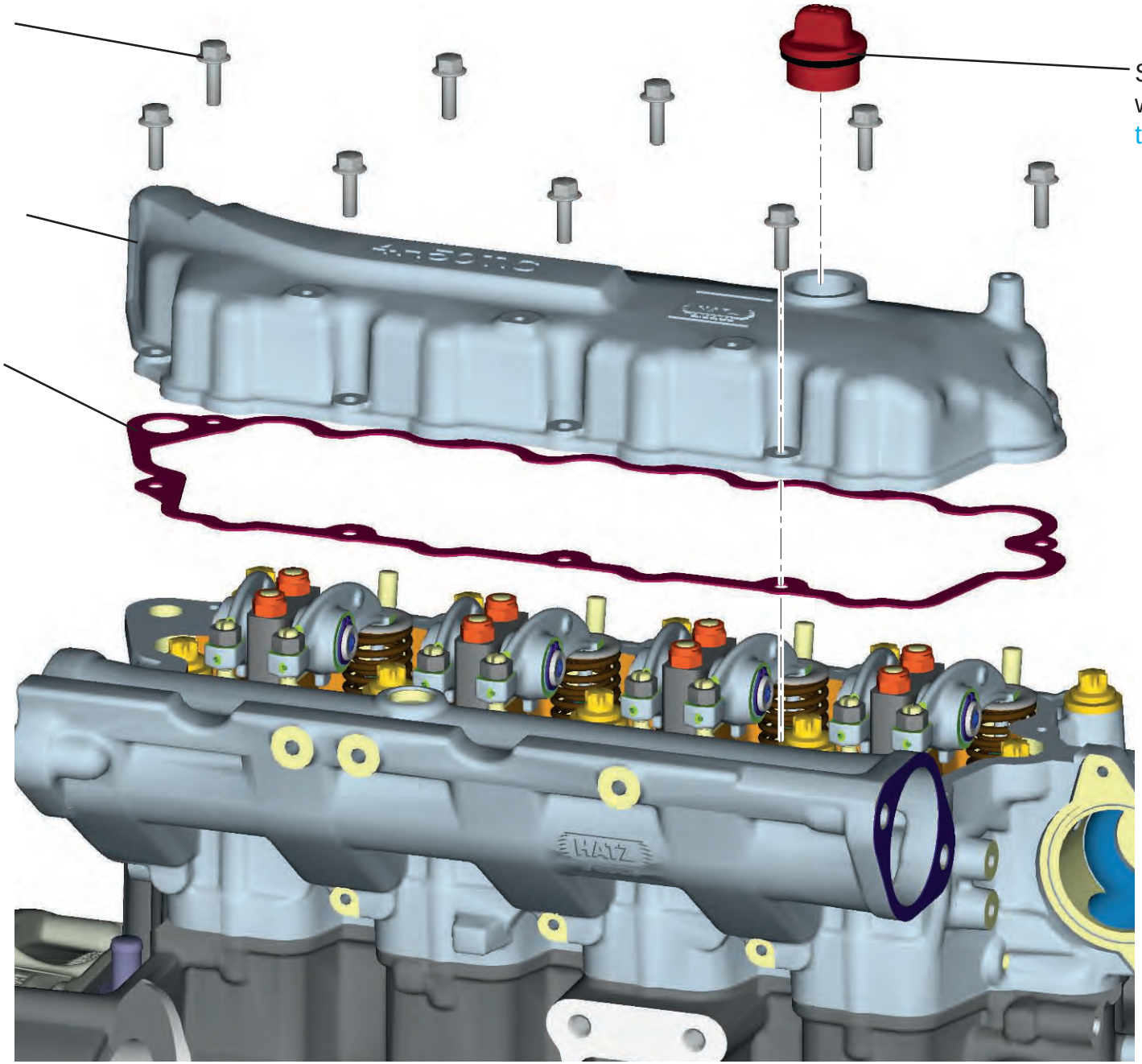

Screw plug for oil filler
with RK ring 26x35x3
tighten hand-tight

Z 05 Glow plugs

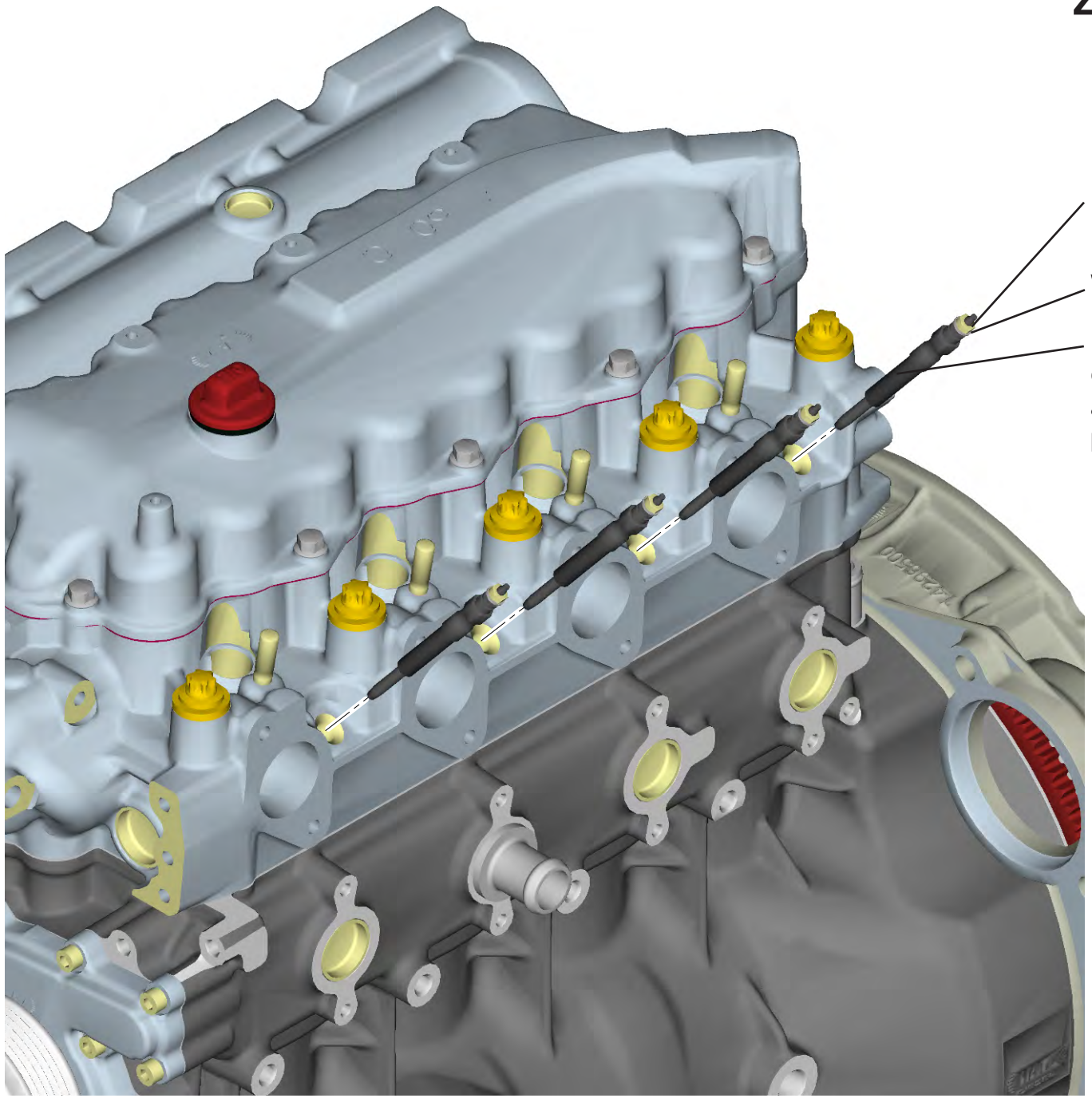

M 07 Thermostat, temp. sensor

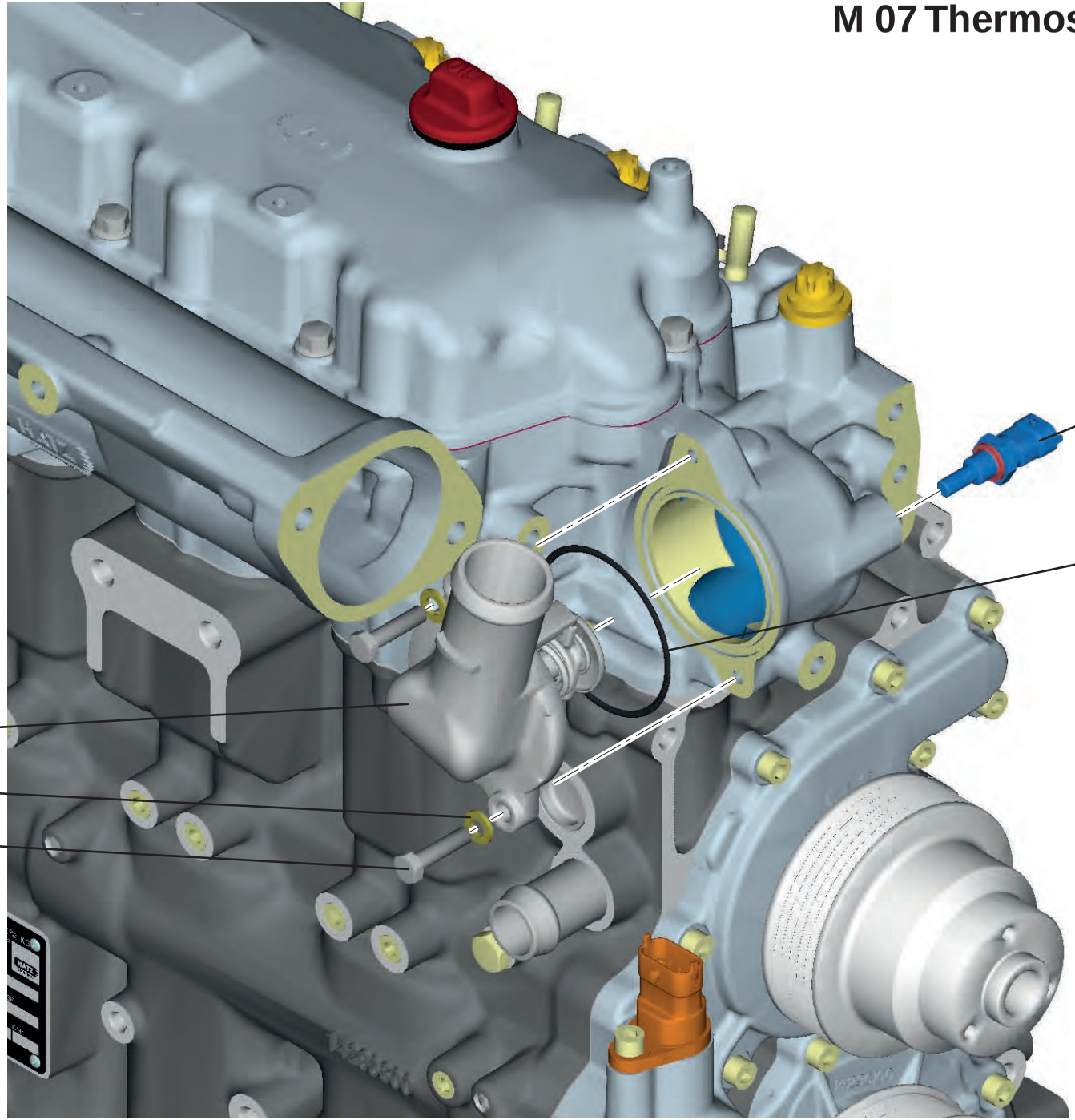

M 28 Exhaust manifold

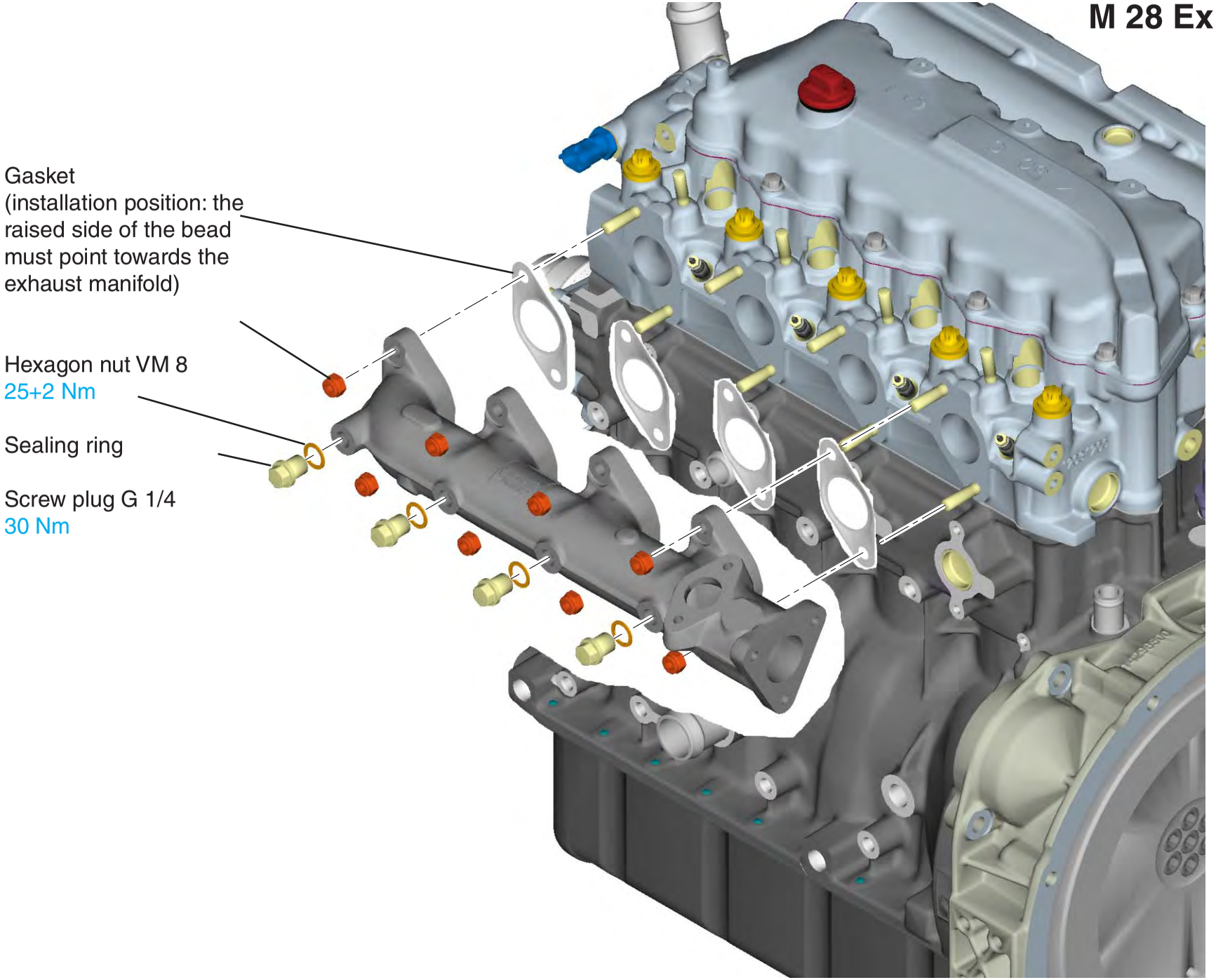

M 28 Turbocharger

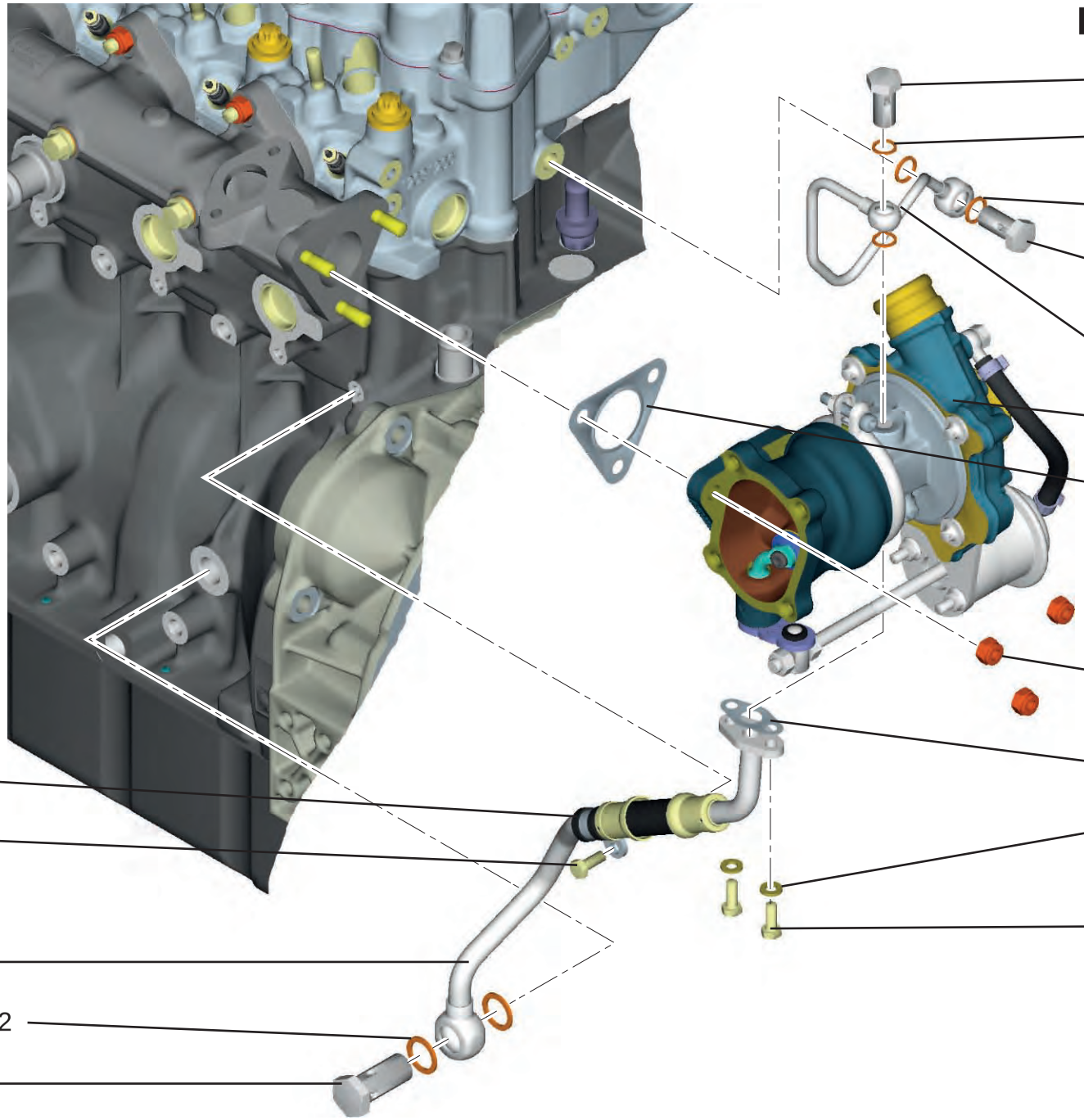

M 30 Lifting device

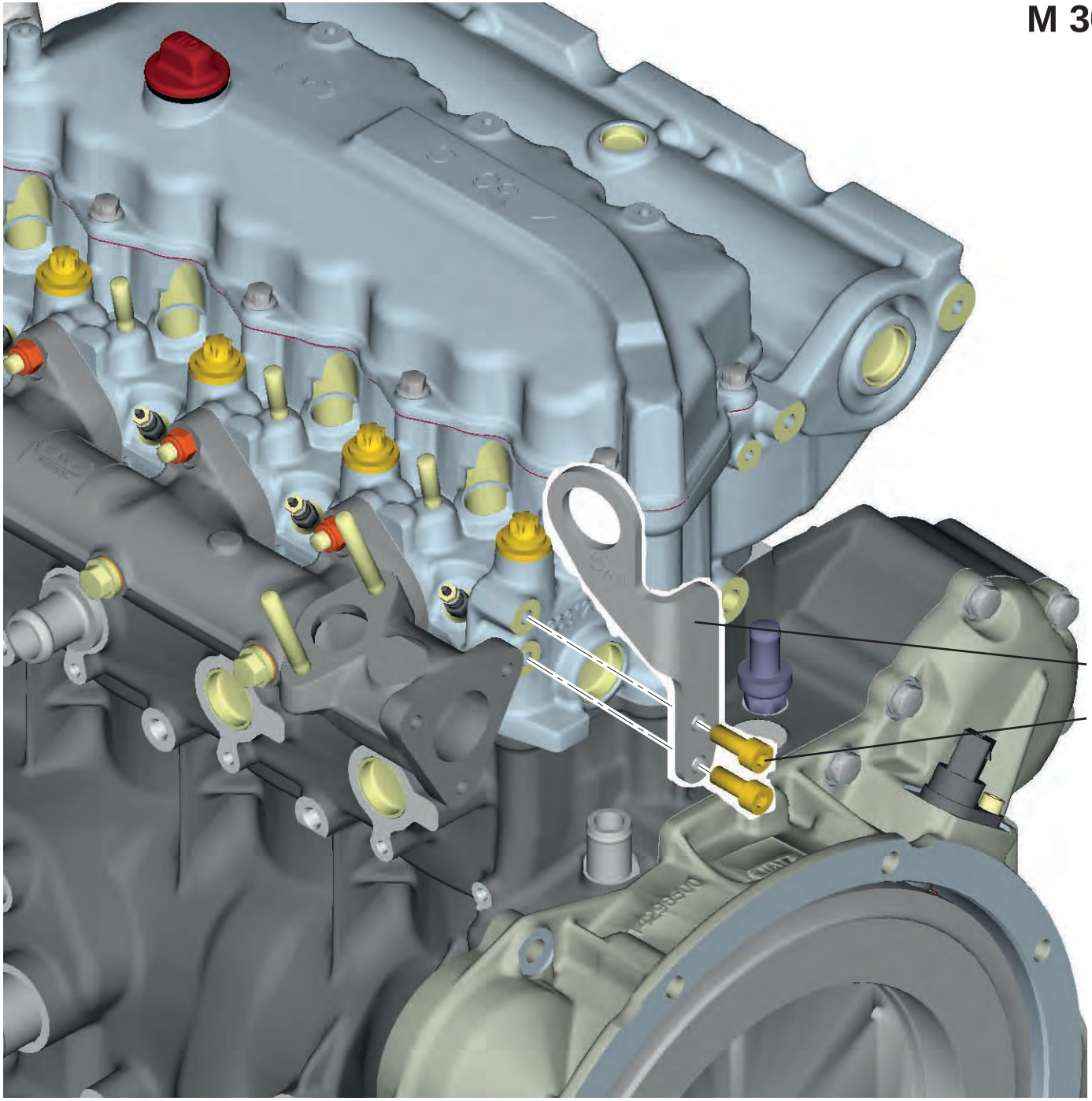

M 37 Exhaust gas return

Note:
To guarantee a tension-free assembly, the mixing nozzle, the AGR cooler and the housing with bracket must first be pre-mounted without tightening and then tightened in the specified sequence.

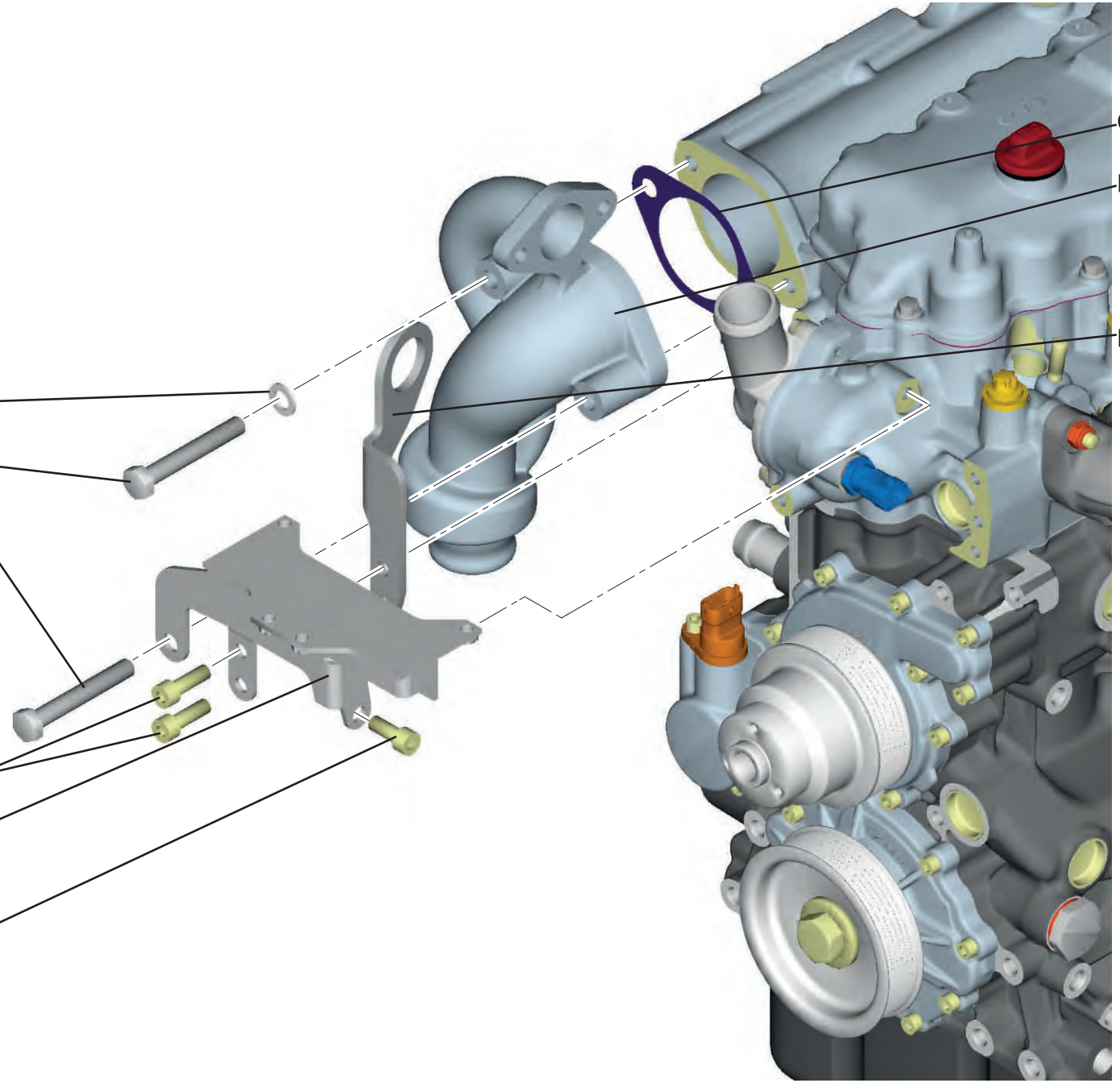

M 37 Exhaust gas return

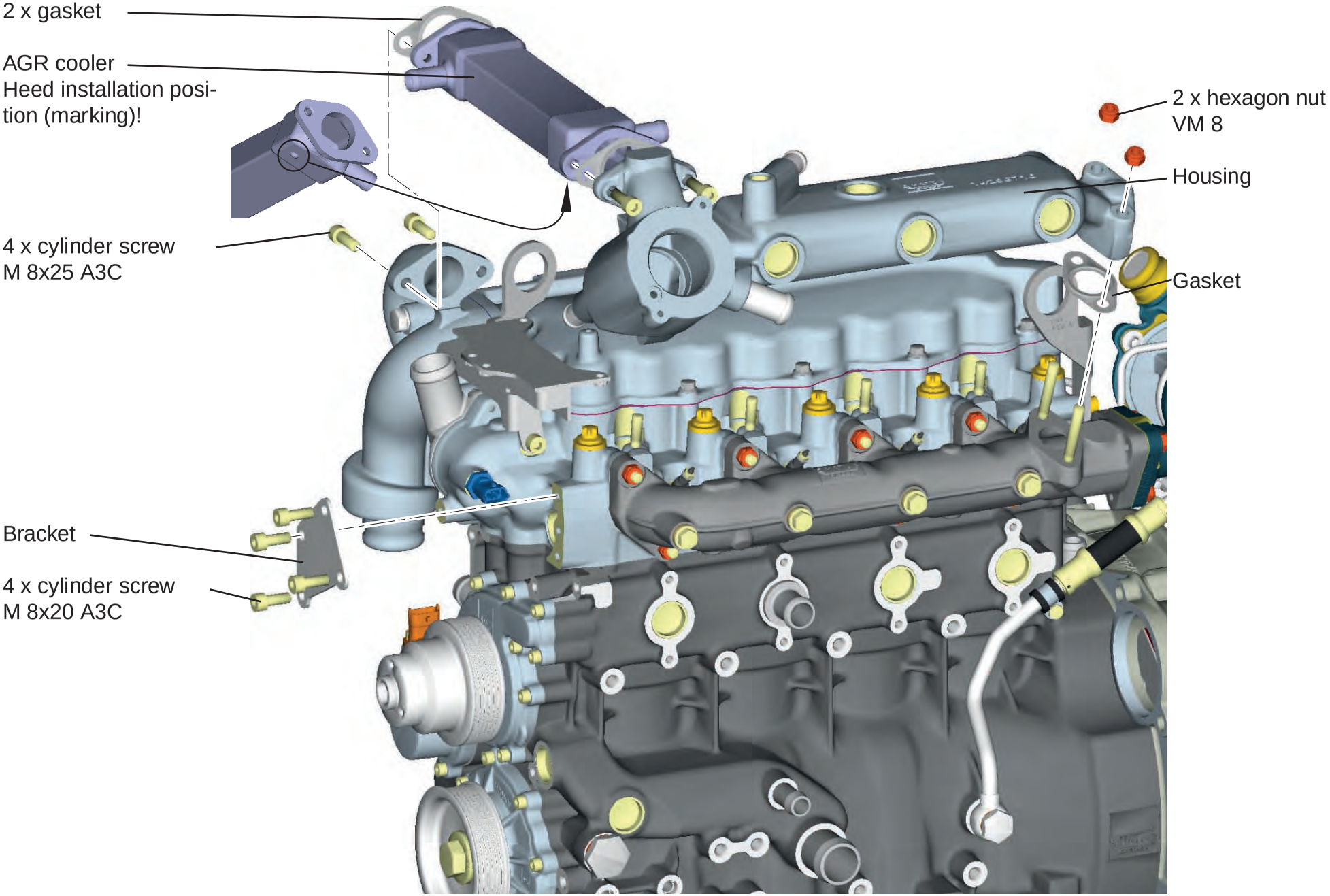

M 37 Exhaust gas return

Tightening sequence:

Position 1:
2 x hexagon nut
VM 8
23 Nm

Position 2:
2 x cylinder screw
M 8x25
23 Nm

Position 3:
2 x cylinder screw
M 8x25
23 Nm

Position 4:
2 x hexagon bolt
M 10x70
46 Nm

Position 5:
4 x cylinder screw
M 8x20
23 Nm

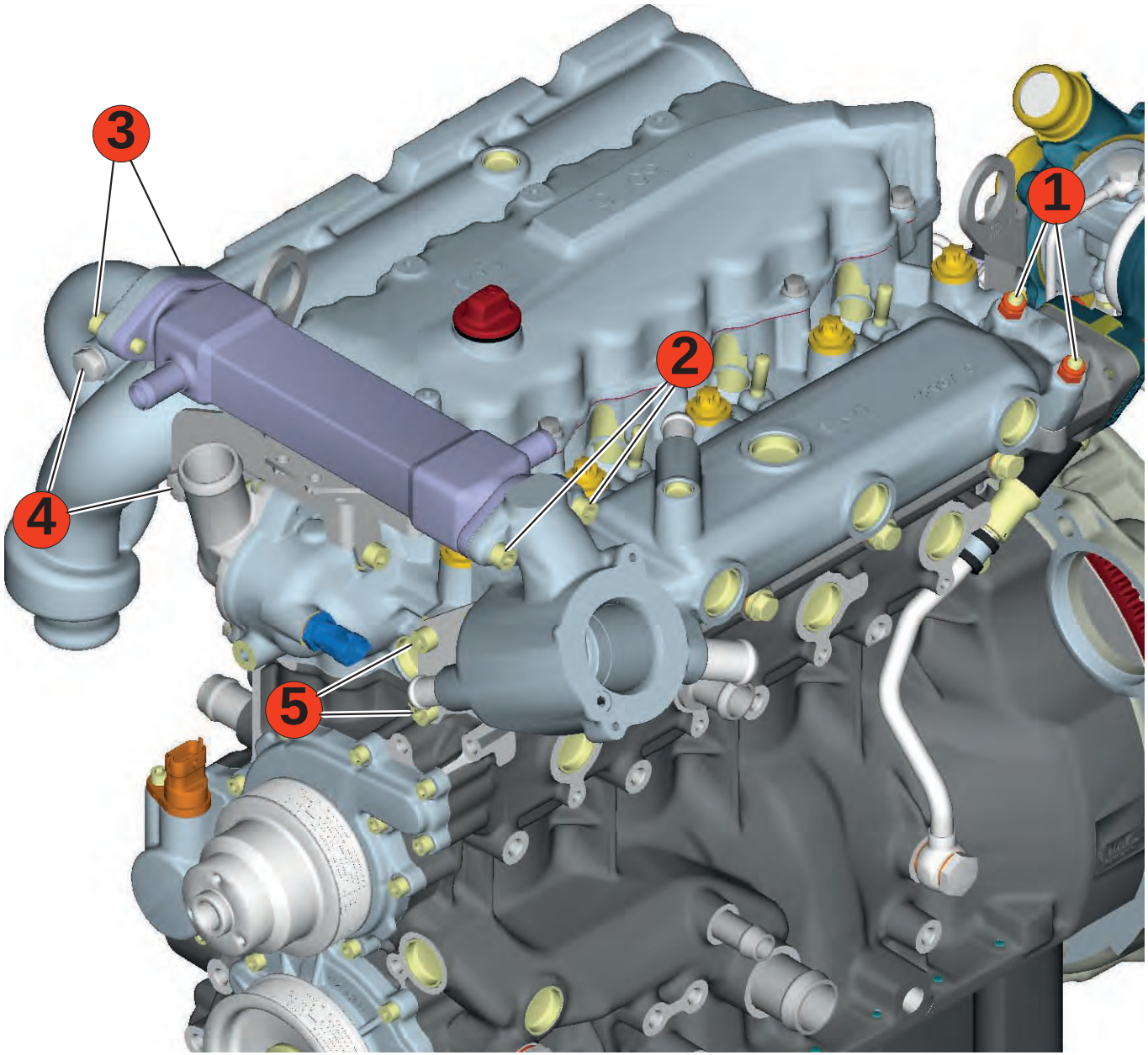

M 37 Exhaust gas return

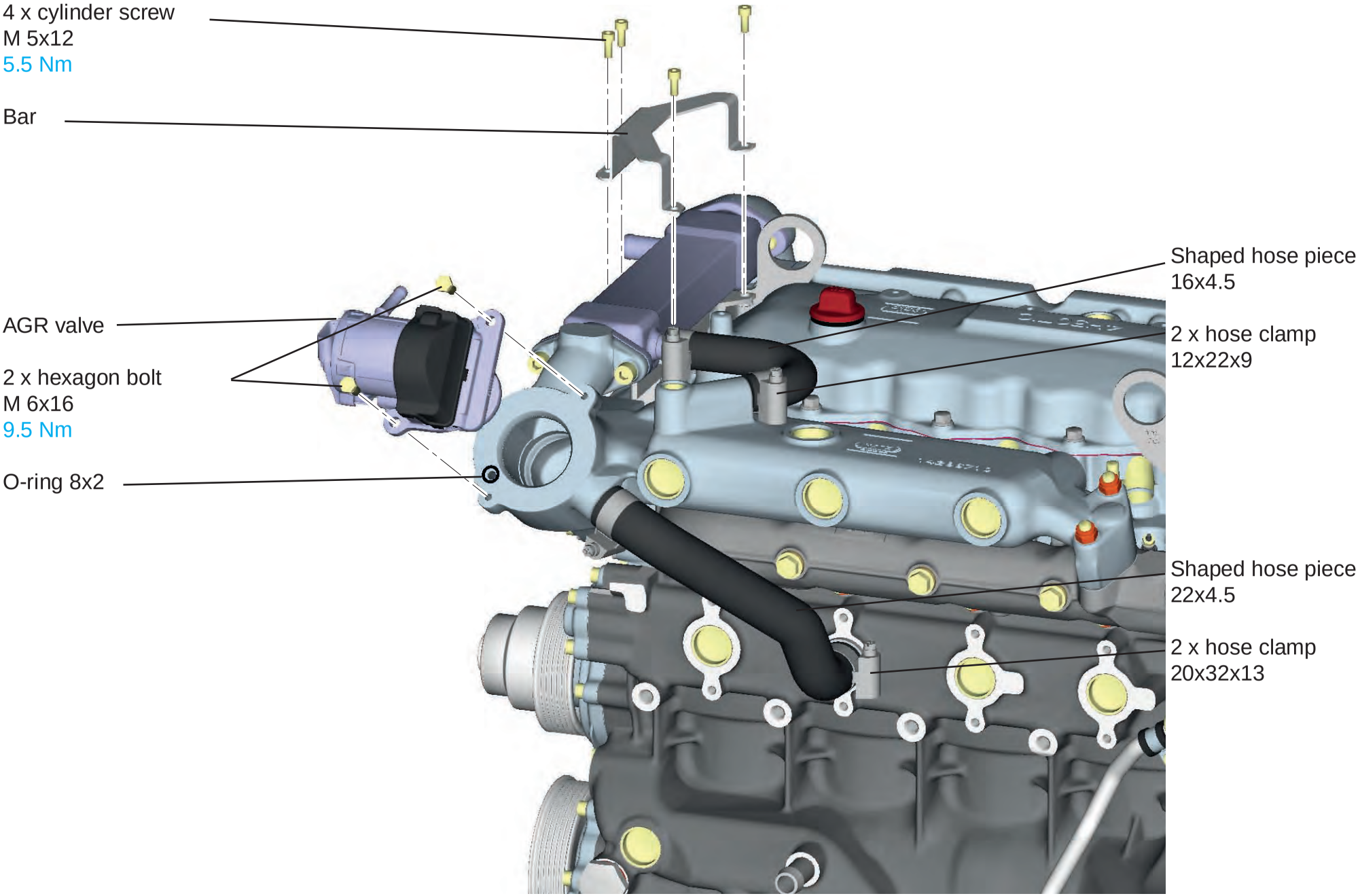

M 37 Exhaust gas return

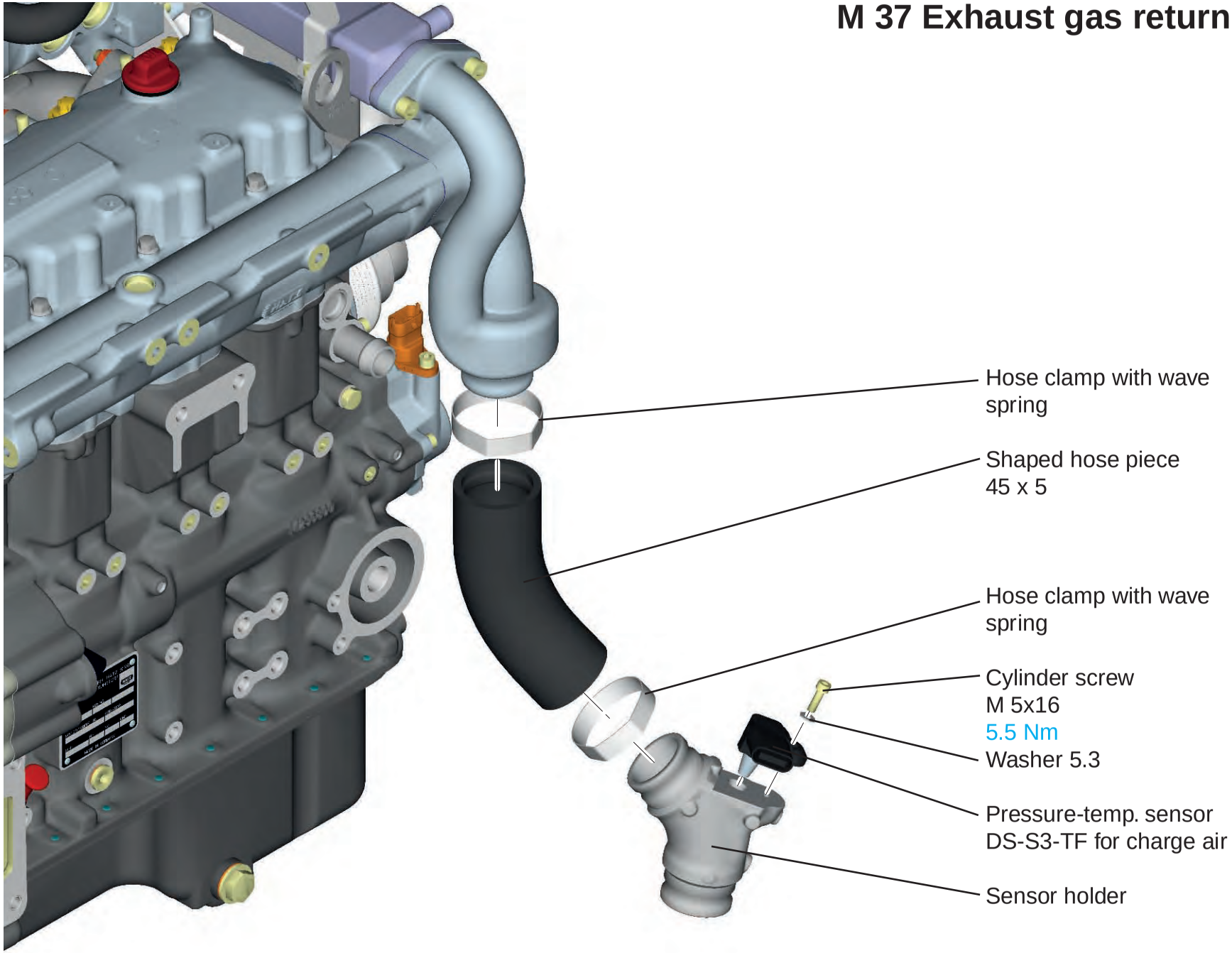

General instructions:

All work on the injection system may only be done in the voltage and pressure-free state (disconnect battery).
During all work on the injection system, cleanliness must be heeded in order to avoid the entry of particles into the injection system or the engine.
After every loosening of a pressure tube, it must be replaced!

Mounting of injectors on the engine

Remove the protective caps only right before mounting. Make sure that the nozzle cap and thus the injection holes are not damaged. Moisten exterior gaskets (O-rings) with installation oil, engine oil or diesel. Lubricants and glide agents that contain water are not permissible.
Before mounting, it may be necessary to check the correct position of the copper sealing disk on the nozzle clamping nut.
Attention must be paid that the injector is inserted into the cylinder head bore without damage. A transmission of force to the return connection or the plastic overmold must be avoided.
All plug connectors must be snapped in securely and locked during mounting.
The cap nut of the high-pressure line must be fastened properly before start-up.
If necessary, injector-specific data such as the IMA code must be transferred to the control unit. These serve the correct activation of the injectors and thus the intended operation.
The injector does not have to be ventilated before initial start-up.

Dismounting of injectors on the engine

The dismounting of the injectors must be done analogously to the mounting. Open connections must be sealed with protective caps.
To loosen the high-pressure screw connection, hold the hexagon of the inlet connector tight. With a loosened inlet connector, the high-pressure seal of the injector is no longer guaranteed.

Remounting of injectors on the engine

After each loosening of an injector, the old copper sealing ring must be removed and a new one used.
In order to get cylinder-specific correction data for the engine controller, the injectors should be inserted on the original cylinder when re-using. In principle, the installation on other cylinders is also possible, however only if the IMA correction values are read into the control unit again.
Injectors can be cleaned before re-installation below the high-pressure connection in vertical position in the ultrasound bath.
Mechanical cleaning of the nozzle shaft with brushes is impermissible in order to prevent damage to the injection holes.

Fuel return line:
max. number of plug assembly/removal (plugging in; locking; unlocking; removing the plug from the counter piece): **10x**
If during the removal of the plug connectors the O-ring on them is damaged, then the entire return line must be replaced.
Before re-mounting of the plug connectors, it must be ensured that the counter pieces are not soiled or corroded.
Hose-nozzle connections may not be loosened. The mounting of the fuel return line on the vehicle low-pressure circuit and on the injector must be done dry (without mounting aids).The mounting of the return line on the engine is done by hand.

Mounting:
Plug return plug on injector return connection (until contact of the contact surface is on the injector (picture 1).
Then close the locking bar (bar must snap into the closed position and be even with mounting surfaces)(picture 2).
In order to guarantee the function, the return plugs must be mounted according to the mounting instructions above.
Otherwise fuel can escape!

Dismounting:
Dismounting must be done by hand.
Open safety bar. Meanwhile, press on mounting surface in plug direction (safety bar must snap into open position (picture 3). Then remove return plug from injector return connection (picture 4).

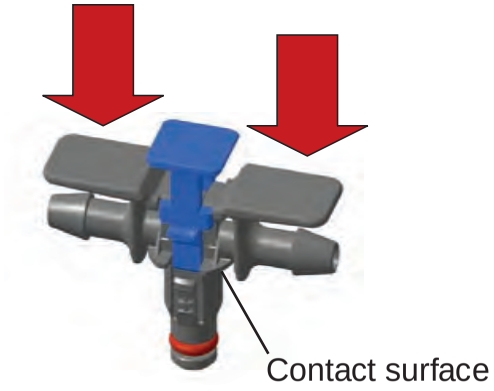

Picture 1

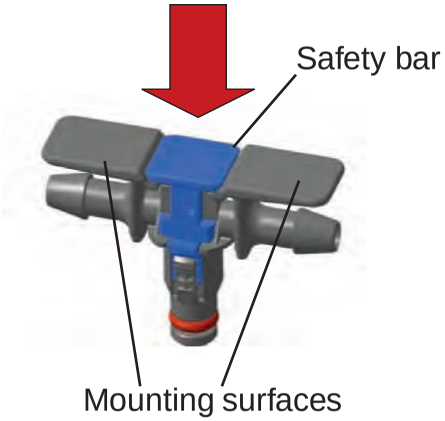

picture 2

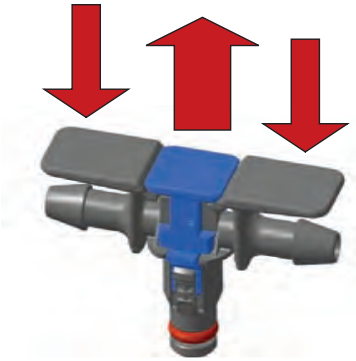
picture 3

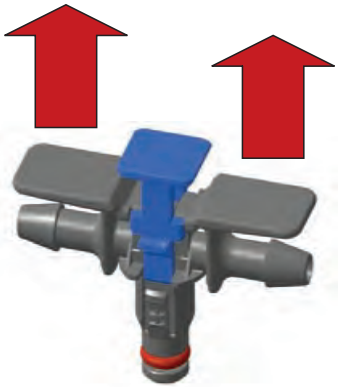
picture 4

M 14 Injection system

Before the installation or removal of the high-pressure pump, the crankshaft must be turned into the position "CP4" (marking visible through inspection hole in the connection housing).
The marking on the high-pressure pump is now in the position shown.
This is the basic position for the mounting of the high-pressure pump.
Mounting precision:
± 1 tooth.
For mounting, grease the O-ring slightly (silicone grease)

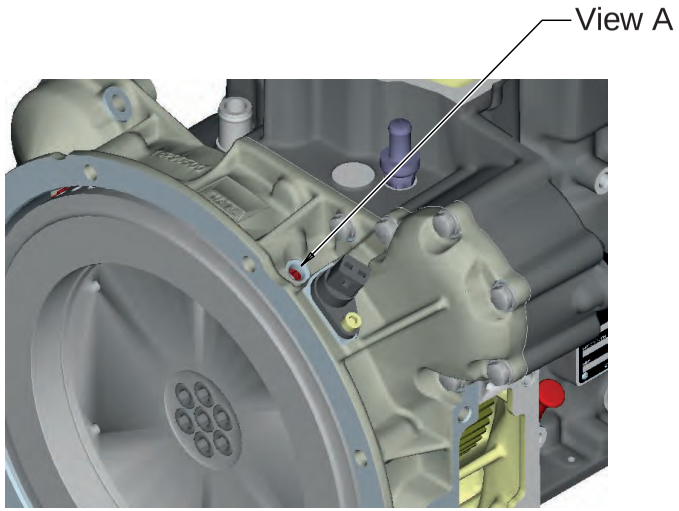

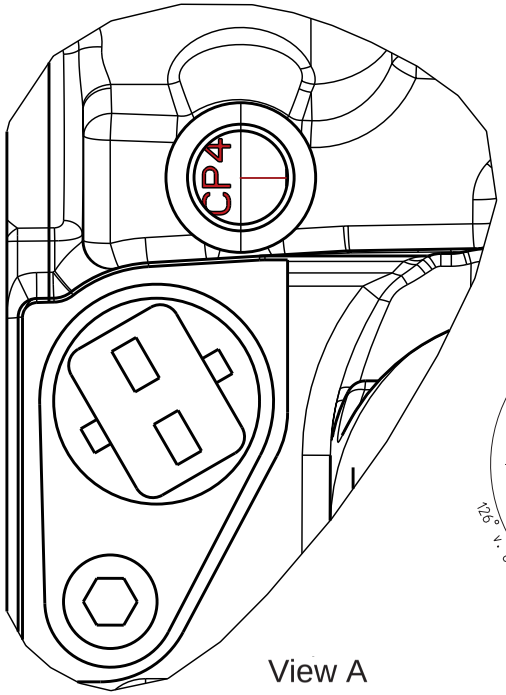

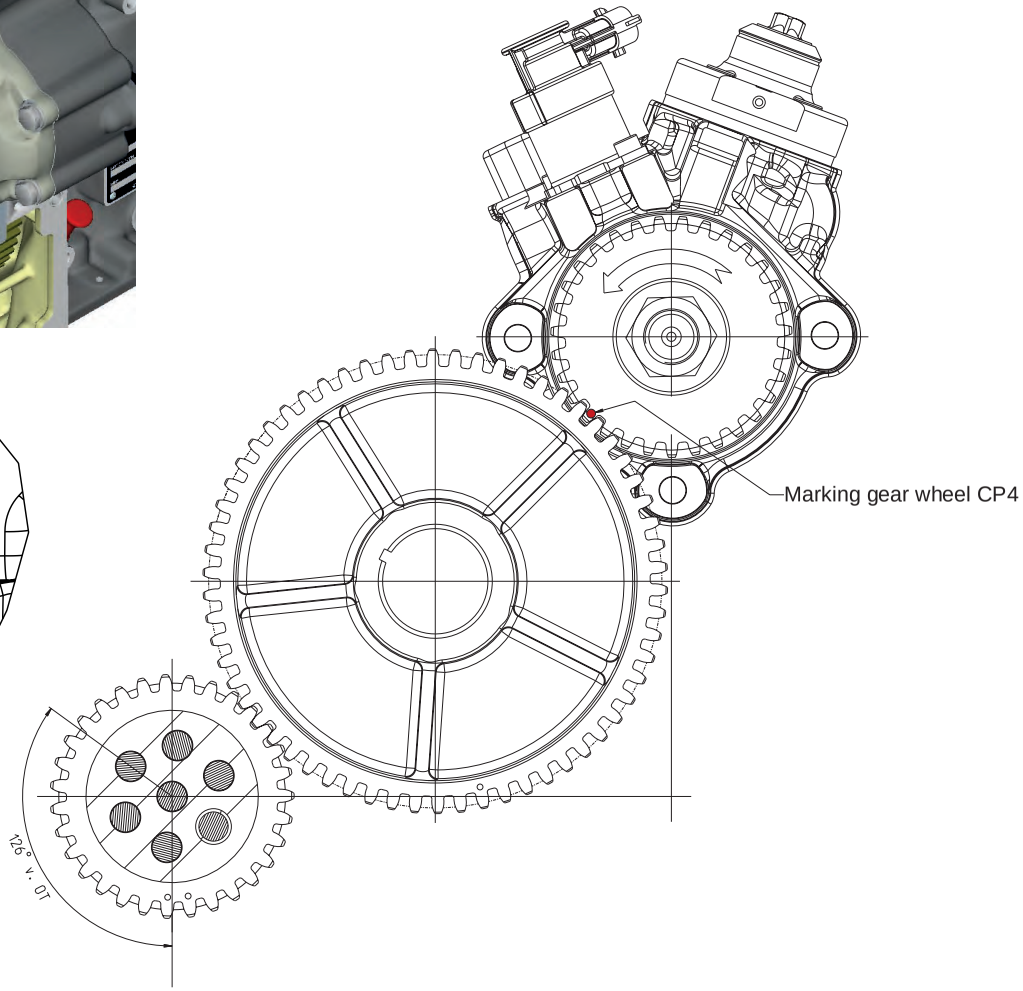

M 14 Injection system

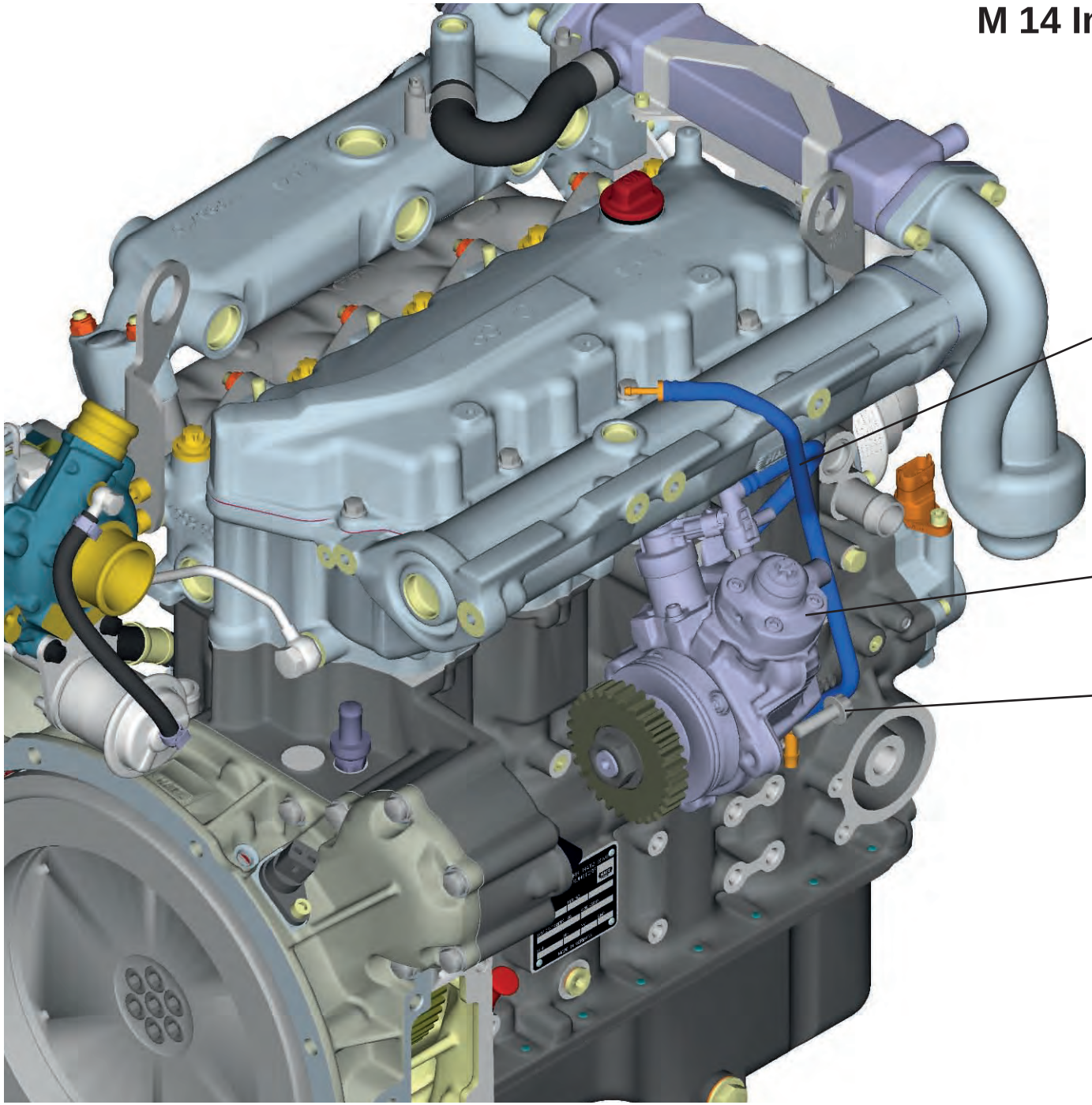

Fuel line
(mount on the return connection before installation of the high-pressure pump)

High-pressure pump
CP4

3 x hexagon bolt with flange
M 8x30
23 Nm

M 14 Injection system

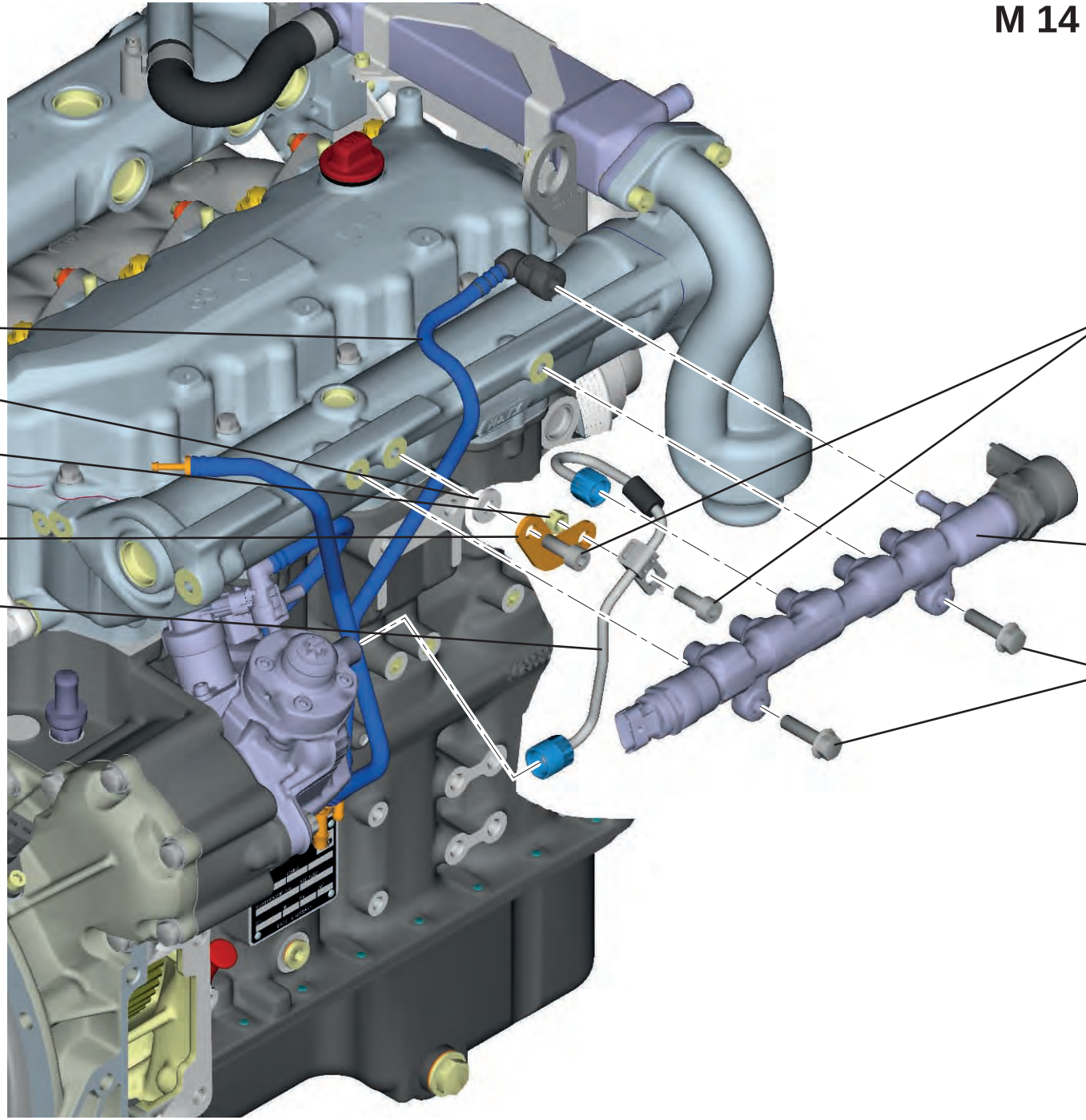

M 14 Injection system

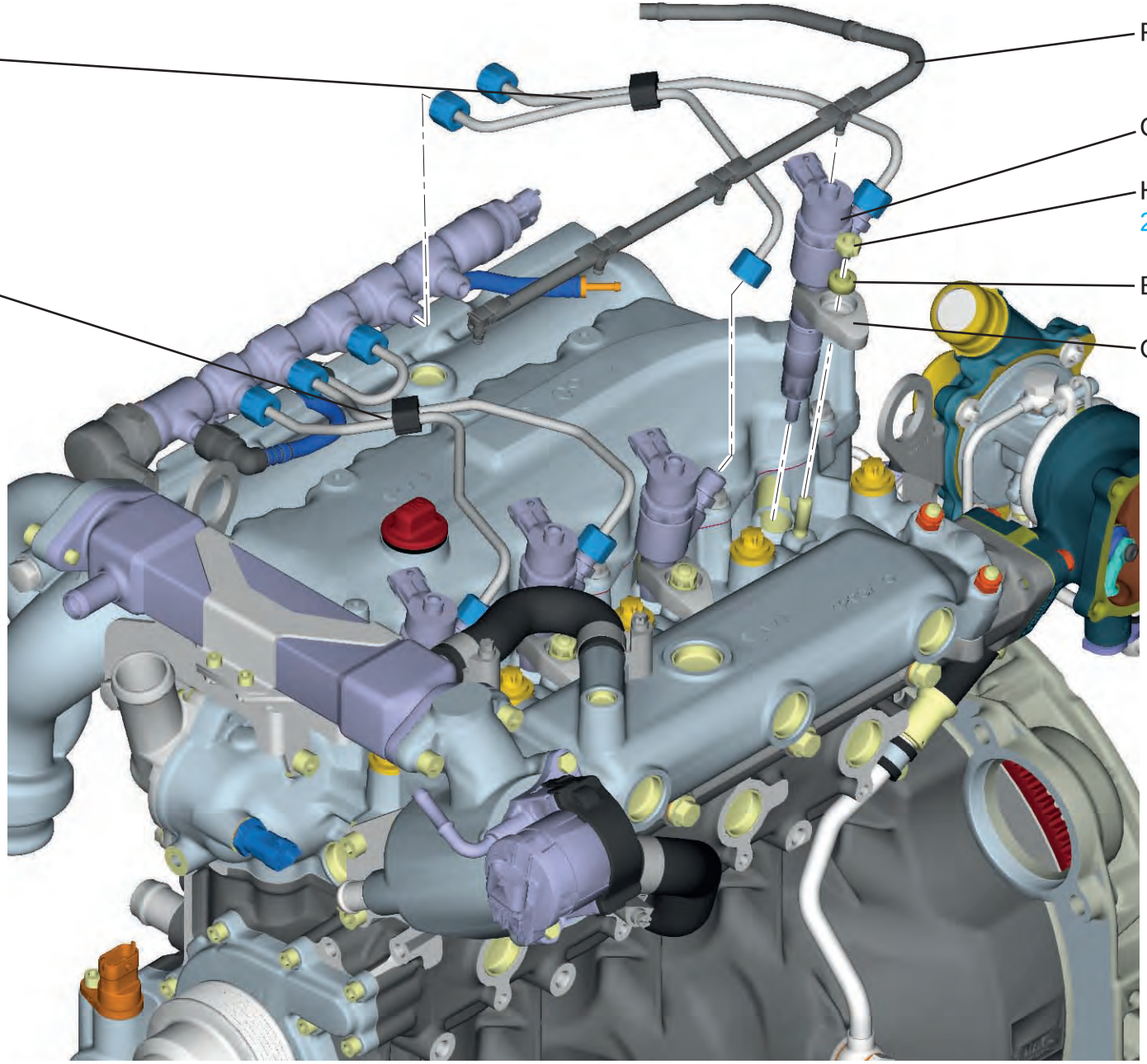

M 31 Crankcase ventilation

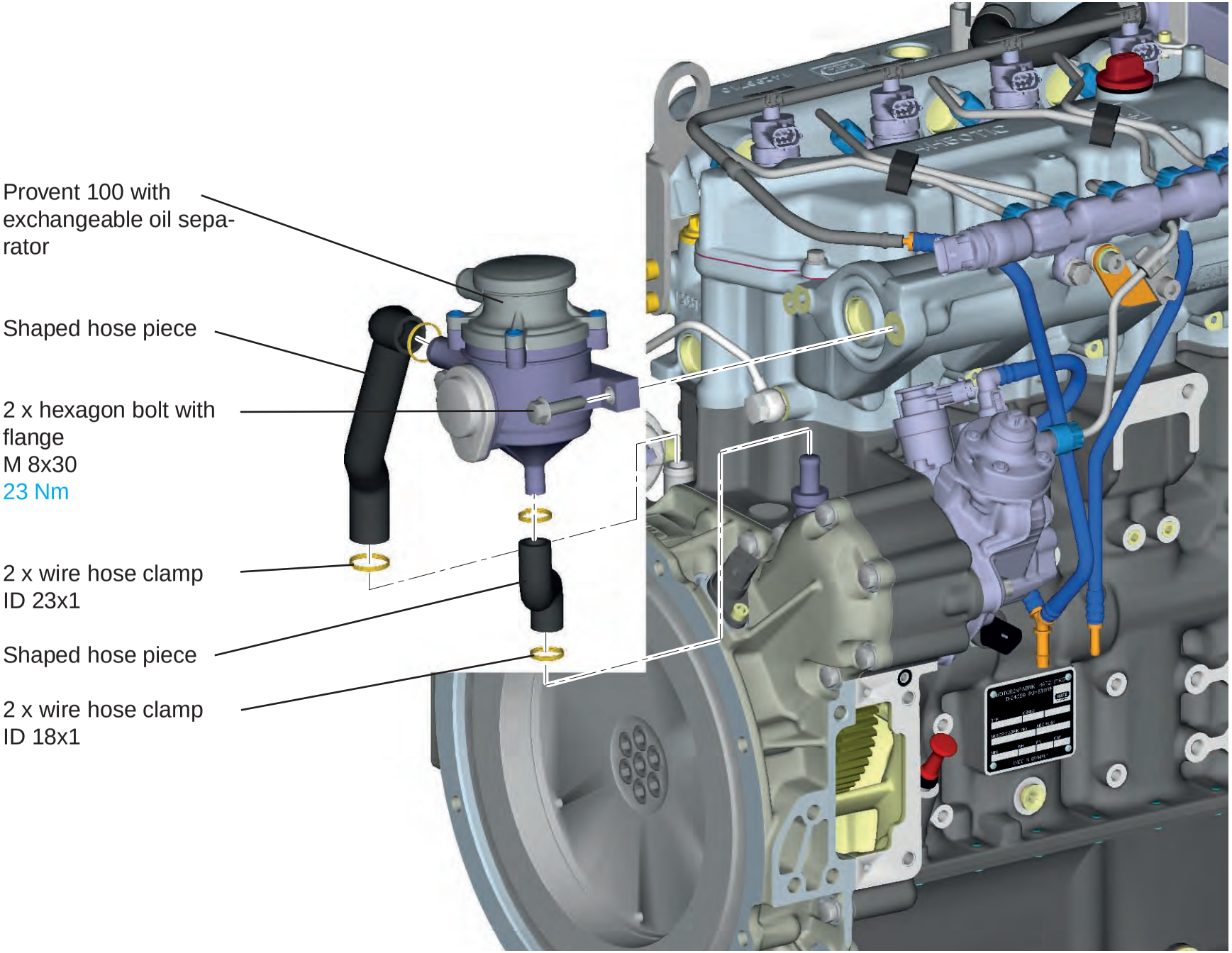

4. Tables

Screw tightening torque

General [Nm]:

Nm ÷ 9.81(10) = kpm
Nm ÷ 1.3558 = Lbs ft

Thread	Screw quality			
	5.8	8.8	10.9	12.9
M 4	1.7	2.8	3.9	4.7
M 5	3.4	5.5	7.8	9.3
M 6	6.0	9.5	13	16
M 8	14	23	33	39
M10	29	46	65	78
M12	50	80	110	140
M14	80	130	180	220
M16	120	190	270	330
M18	170	270	380	450
M20	240	380	530	640
M22	320	510	720	860

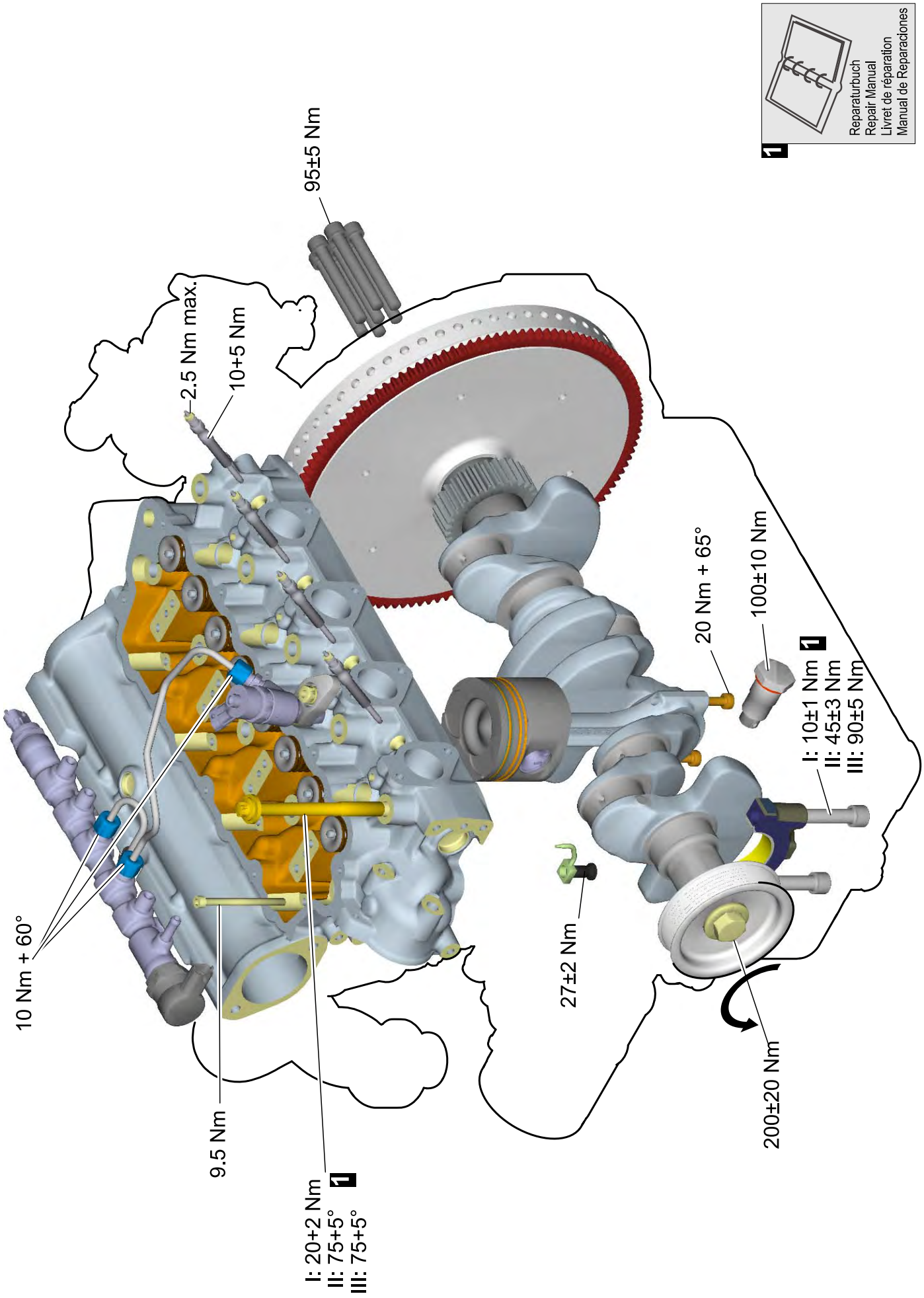
1
Reparaturbuch
Repair Manual
Livret de réparation
Manual de Reparaciones
95±5 Nm
2.5 Nm max.
10+5 Nm
20 Nm + 65°
100±10 Nm
I: 10±1 Nm 1
II: 45±3 Nm
III: 90±5 Nm
10 Nm + 60°
27±2 Nm
200±20 Nm
9.5 Nm
I: 20+2 Nm 1
II: 75+5°
III: 75+5°

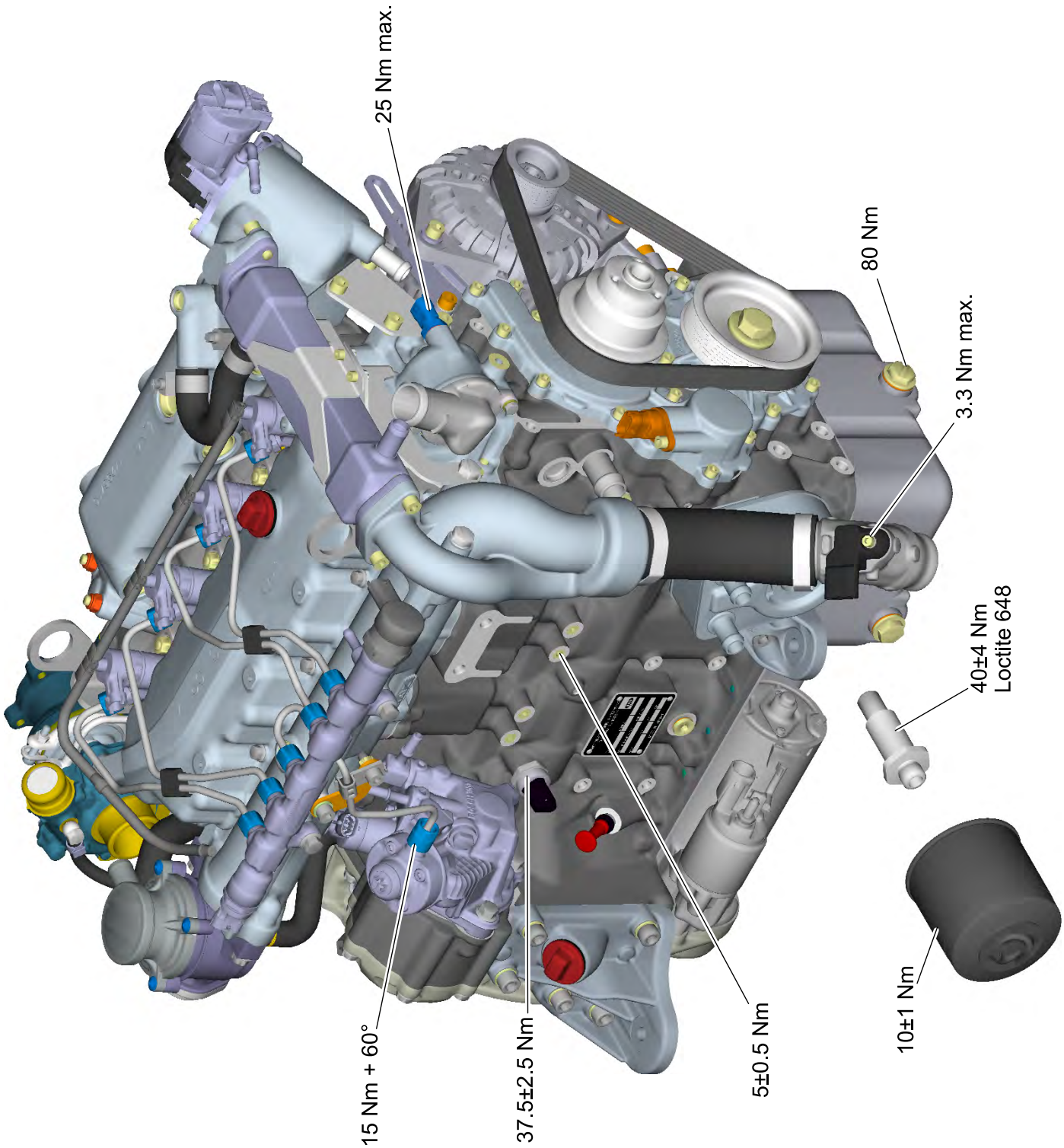
25 Nm max.
80 Nm
3.3 Nm max.
40±4 Nm
Loctite 648
10±1 Nm
5±0.5 Nm
37.5±2.5 Nm
15 Nm + 60°

Identification on wiring diagrams (DIN 40719)

Identifier	Designation of the electrical components
A 1	Instrument box
A 2	Instrument plate
A 3	Start stop automatic
A 4	Starter protection module
B 1	Temperature sensor
B 2	Speed encoder
B 3	Oil pressure sensor
B 4	Signal horn
C1	Condenser
E1	Heater for fuel filter
F1	Fuse
G1	Battery
G2	Three phase alternator
G3	Flywheel alternator
H 1	Indicator light for alternator control
H 2	Indicator light for oil pressure
H 3	Indicator light for engine temperature
H 4	Indicator light for air filter (maintenance switch)
H 5	Indicator light for belt break
H 6	Indicator glow monitoring
H 7	Indicator light fan monitoring
H 8	Remote display: engine on
K 1	Control relay 1 for start / restart block
K 2	Control relay 2 for pre-glow
K 3	Control relay 3 for speed adjustment
K 4	Engine protection relay
K 5	Delay relay
K 6	Start block relay
K 7	Time relay (impulse relay)
K 8	Power relay
M1	Starter motor
MG	Starter alternator
N 1	Controller for starter alternator
N 2	Controller for flywheel alternator
N 3	Controller for three phase alternator (if not integrated)
N 4	Impulse encoder (additional for synchro)controller

Identification on wiring diagrams (DIN 40719)

Identifier	Designation of the electrical components
P 1	Operating hours counter
P 2	Tachometer
P 3	Pressure indicator
R 1	Glow plug
R 2	Heating flange
R 3	Series resistor for glow system
R 4	Resistor
R 5	Series resistor with thermo time switch
S 1	Glow start switch (5 - digit)
S 2	Main switch
S 3	Glow plug starter switch (3 - digit)
S 4	Start stop switch
S 5	Switch for speed adjustment
S 6	Temperature switch for engine temperature
S 7	Oil pressure switch
S 8	Pressure switch for air filter
S 9	Fan monitoring switch
S 10	Temperature switch for pre-glowing
S 11	Remote start switch
S 12	Remote stop switch
T1	Transmitter for speed measurement
V 1	Uncoupling diode
V 2	Free-wheel diode
V 3	Zener diode
V 4	Suppressor diode
W 1	Mass, minus return line
W 2	Screened line on the alternator
X 1	Terminal block on the instrument box
X 2	Flat power strip
X 3	Plug on emergency stop switch
X 4	Outlet on emergency stop switch
X 5	Terminal block in the operator box / terminal box
Y 1	Lift magnet for speed adjustment
Y 2	Lift magnet for engine switch-off
Y 3	Servo magnet (=valve magnet) for engine switch-off
Y 4	Fuel shut-off valve
Y 5	High pressure reset valve
Z 1	Suppression choke
Z 2	Suppressor capacitor

HATZ cable marking

Terminal	Designation
0	Ground
1	Alternator B+
2	For three phase alternator: D+ for flywheel alternator: terminal L on the controller
3	Starter terminal 50
4	Oil pressure switch
5	Temperature switch on the cylinder head
6	Glow plug I
7	Electromagnet for engine switch-off
8	Glow plug II
9	Start stop input
10	Plus terminal for direct current motor speed fine adjustment
11	Minus terminal for direct current motor speed fine adjustment
12	Oil pressure sensor
13	* * * Reserved for special application * * *
14	Speed adjustment magnet - excitation circuit
15	* * * Reserved for special application * * *
16	Lift magnet for decompression
17	Maintenance switch for air filter
18	Electromagnet for engine switch-off (pick-up winding)
19	Temperature sensor on the cylinder head
20	Oil temperature switch
21	Fan monitoring switch
22	Terminal W for speed measurement
23	Starter 30 (for ammeter connection)
24	Terminal C for controller on flywheel alternator
25	Oil temperature sensor
26	Terminal 50f on the starter protection module
27	* * * Reserved * * *
28	Speed adjustment magnet (pick-up winding)
29	* * * Reserved * * *

Bosch designation for cable marking

Bosch	Hatz	German designation	English designation
INJ11	M1	**INJ**ektor Bank **1** - Zylinder **1** (1. Zylinder)	**INJ**ector bench **1** - cylinder **1** (1. cylinder)
INJ12	M2	**INJ**ektor Bank **1** - Zylinder **2** (4. Zylinder)	**INJ**ector bench **1** - cylinder **2** (4. cylinder)
INJ21	M3	**INJ**ektor Bank **2** - Zylinder **1** (3. Zylinder)	**INJ**ector bench **2** - cylinder **1** (3. cylinder)
INJ22	M4	**INJ**ektor Bank **2** - Zylinder **2** (2. Zylinder)	**INJ**ector bench **2** - cylinder **2** (2. cylinder)
FLPS1	B4	Kraftstoff Niederdruck u. Temp. Sensor	**F**uel **L**ow **P**ressure and temp. **S**ensor
OPS	B3	Öldruck/Temperatur Sensor	**O**il **P**ressure/ Temperature **S**ensor
MEU	K2	Hochdruckpumpe mit Zumesseinheit	High Pressure Pump with **ME**tering **U**nit
RDS	B1	**R**ail-**D**ruck **S**ensor	Rail-Pressure-Sensor
DRV	K1	**D**ruck-**R**egel-**V**entil	Pressure Control Valve
CAS	B7	Nockenwellen-Drehzahl Sensor	**CA**mshaft Speed **S**ensor
BPS	B2	Ladedruck-/Temperatur Sensor	**B**oost **P**ressure-/ Temperature **S**ensor
CTS	B5	Kühlmittel-Temperatur Sensor	**C**oolant-**T**emperature **S**ensor
CRS	B6	Kurbelwellen-Drehzahl Sensor	**CR**ankshaft Speed **S**ensor
ATS	B8	Ansaugluft-Temperatur Sensor	**A**ir **T**emperature **S**ensor
WFS	B9	Wasser im Kraftstoff Sensor	**W**ater in **F**uel **S**ensor
CLS	S7	Kühlmittel-Niveau Sensor	**C**oolant-**L**evel **S**ensor
AFDPS	B10	Luftfilter-Wartungs Sensor	**A**ir **F**ilter **D**ifference **P**ressure **S**ensor
EGRPS	B11	AGR-Druck Sensor	**EGR**-**P**ressure **S**ensor
EGR	M7	Abgas-Rückführ Ventil	**E**xhaust-**G**as-**R**ecirculation Valve
EDC		Elektronische Dieselregelung	**E**lectronic **D**iesel **C**ontrol
EKP		**E**lektro-**K**raftstoff-**P**umpe	Elektric-Fuel-Pump
EMV		**E**lektro**M**agnetische **V**erträglichkeit	Electromagnetic Compatibility
EPW		**E**lektro-**P**neumatischer **W**andler	Electro Pneumatic Converter
HFM		Heißfilm-Luftmassenmesser	**H**ot **F**ilm Air **M**ass Sensor
HS			**H**igh-**S**ide
LS			**L**ow-**S**ide
LDF		**L**ade **D**ruck **F**ühler	Boost Pressure Sensor
NTC		Negativer Temperaturkoeffizient	**N**egative **T**emperature **C**oefficient
OBD		**O**n**B**oard-**D**iagnose	**O**n **B**oard **D**iagnostic
OL			**O**pen **L**oad
PTC		Positiver Temperaturkoeffizient	**P**ositive **T**emperature **C**oefficient
PWG		**P**edal **W**ert **G**eber	Accelerator Pedal Sensor
APP		Pedalposition	**A**ccelerator **P**edal **P**osition
SG		**S**teuer**G**erät	Control Unit
ECU		SteuerGerät	**E**lectronic **C**ontrol **U**nit
VTG		Lader mit variabler Turbinengeometrie	**V**ariable **T**urbine **G**eometry
ZME		**Z**u-**M**ess-**E**inheit	Metering Unit

Cable harness max.

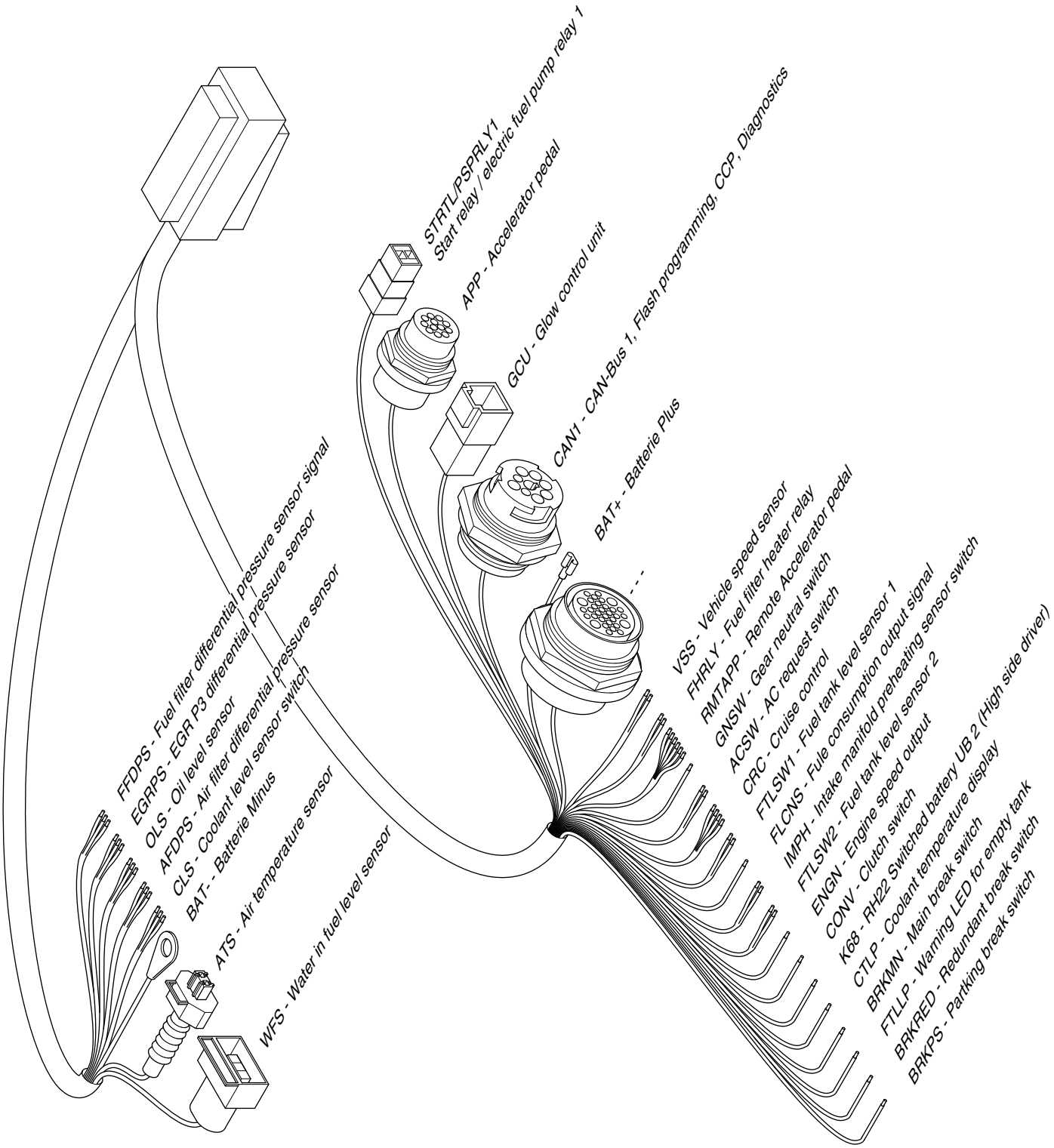

Cable harness min.

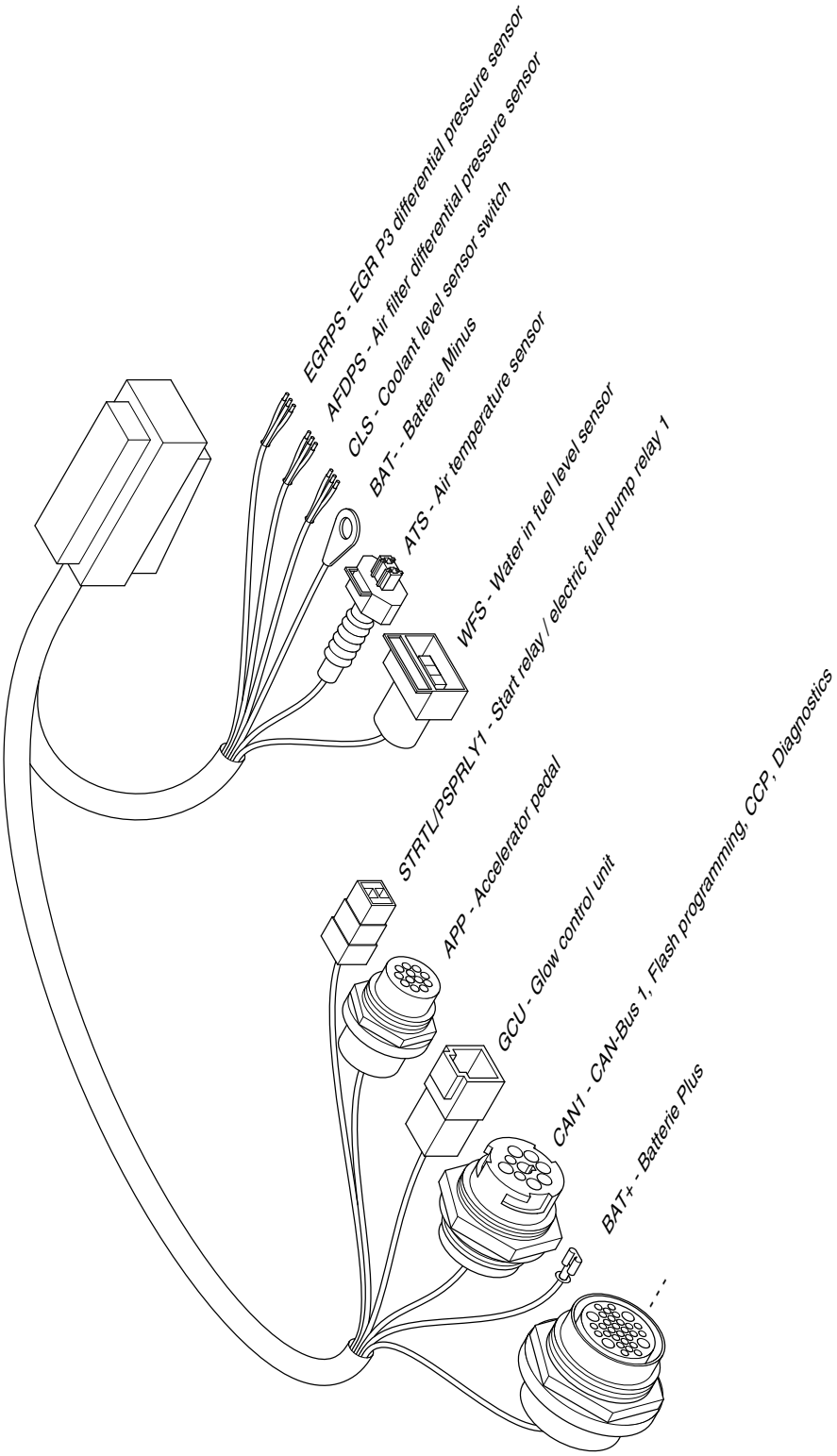

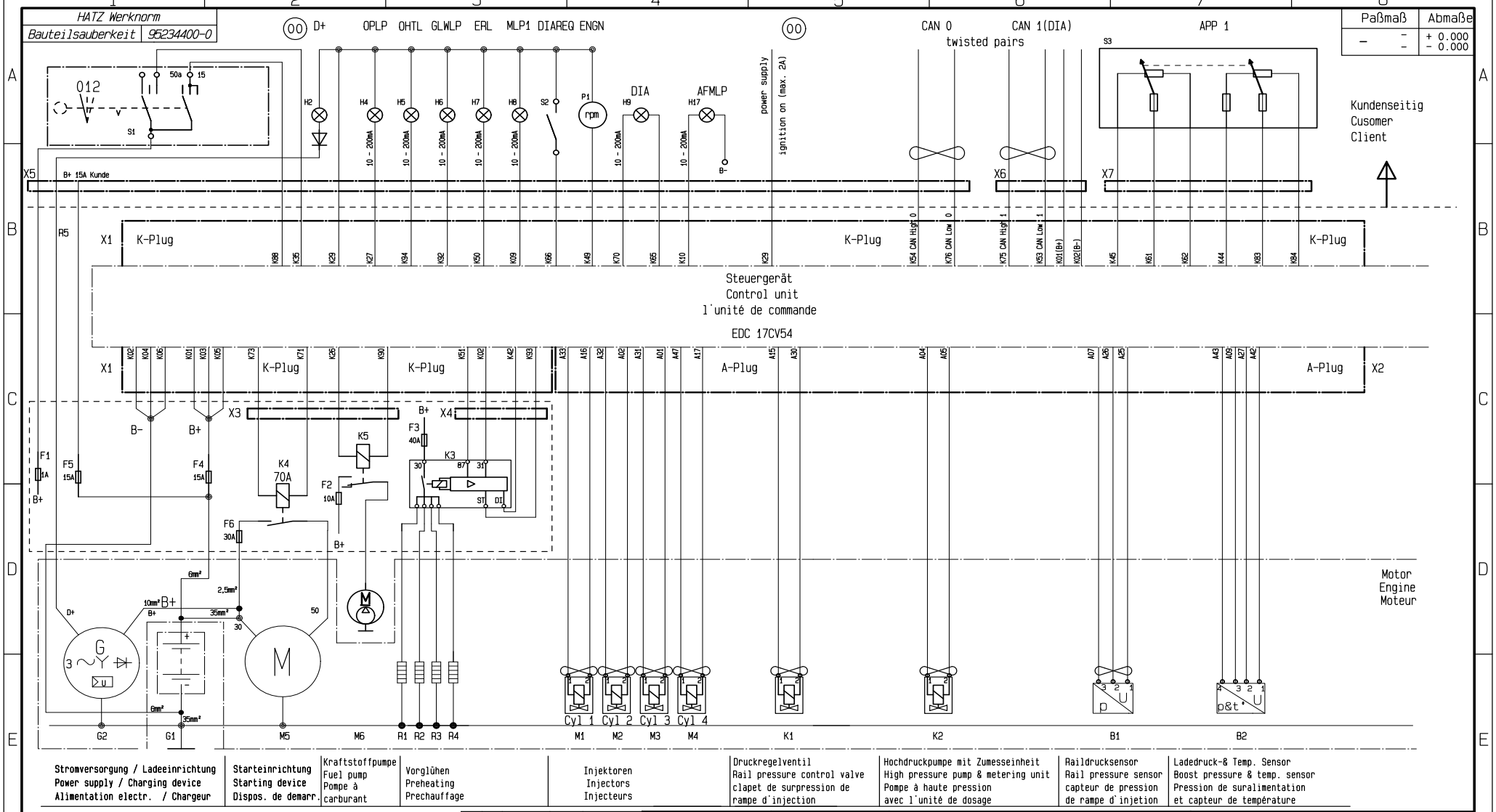

Paßmaß	Abmaße
–	+ 0.000 - 0.000

Achtung:Gewährleistungsverlust bei Veränderung der Schaltung oder Verdrahtung ohne Rücksprache mit dem Werk!

T15/K88 darf ausschließlich als Signaleingang für "Zündung Ein" am Steuergerät verwendet werden!

Als Spannungsversorgung Kundenseitig ("Zündung Ein" Kl.15) ist K29(max 2A) zu verwenden!

Anz	Nr.	Datum	Name	Änderung
2x	00	08.01.15	CR	H.15/001

NICHT MANUELL ÄNDERN

Oberflächenbeschaffenheit
SURFACE ROUGHNESS
DIN EN ISO 1302 Reihe 2

Werkstückkanten DIN ISO 13715
EDGES OF WORKING PARTS

Allgemeintoleranzen
GENERAL TOLERANCES
DIN ISO 2768 - m

Form- u. Lagetolerierung
GEOMETRICAL TOLERANCING
DIN ISO 1101

Schutzvermerk
PROTECTION MARK
nach/ACC. TO DIN ISO 16016

HATZ DIESEL
MOTORENFABRIK HATZ RUHSTORF-ROTT

Stromlaufplan
Standard 12V
4H50TIC

Maßstab/SCALE 1:1 (:) ISO E

CAD	Datum	Name
Gez.	08.01.15	CR
Gepr.	08.01.15	MO

Werkstoff/MATERIAL Gewicht (kg):

Rohteil-Nr.: / RAW-PART No.
Blatt 1

Fertigteil Nr.:/FINISH-PART No. Typ ZF
05460410.1363

HATZ Werknorm

Bauteilsauberkeit 95234400-0

Paßmaß	Abmaße
–	+ 0.000 - 0.000

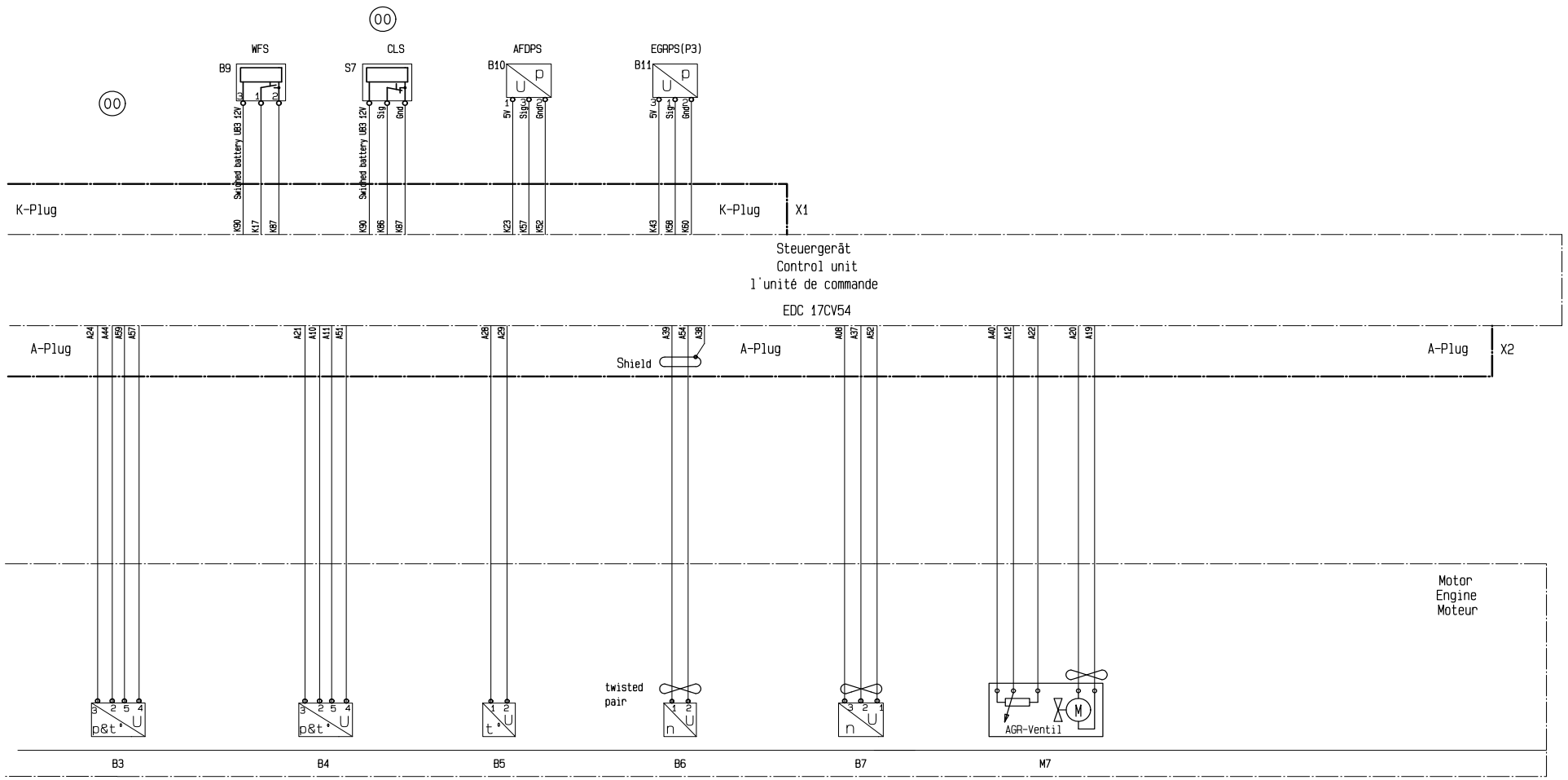

Öldruck-und Temp. Sensor Oil pressure & temp. sensor Pression d'huile et le capteur de température	Kraftstoff Niederduck & Temp. Sensor Fuel low pressure & temp. sensor Capteur et la température de combustible à basse pression	Kühlmitteltemp. Sensor Coolant temp. sensor Capteur de température de liquide de refroidissement	Kurbelwellen-Drehzahlsensor Crankshaft speed sensor Capteur de vitesse de vilebrequin	Nockenwellen-Drehzahlsensor Camshaft speed sensor Capteur de vitesse de l'arbre à cames	AGR Ventil EGR valve Soupape de recirculation des gaz d'échappement

Achtung:Gewährleistungsverlust bei Veränderung der Schaltung oder Verdrahtung ohne Rücksprache mit dem Werk!

T15/K88 darf ausschließlich als Signaleingang für "Zündung Ein" am Steuergerät verwendet werden!

Als Spannungsversorgung Kundenseitig ("Zündung Ein" Kl.15) ist K29(max 2A) zu verwenden!

Anz	Nr.	Datum	Name	Änderung
2x	00	08.01.15	CR	H.15/001

NICHT MANUELL ÄNDERN

Oberflächenbeschaffenheit
SURFACE ROUGHNESS
DIN EN ISO 1302 Reihe 2

Werkstückkanten DIN ISO 13715
EDGES OF WORKING PARTS

Allgemeintoleranzen
GENERAL TOLERANCES
DIN ISO 2768 - m

Form- u. Lagetolerierung
GEOMETRICAL TOLERANCING
DIN ISO 1101

Schutzvermerk
PROTECTION MARK
nach/ACC.TO DIN ISO 16016

HATZ DIESEL

MOTORENFABRIK HATZ RUHSTORF-ROTT

Stromlaufplan

Standard 12V

4H50TIC

Maßstab/SCALE 1:1 (:)

ISO E

CAD	Datum	Name
Gez.	08.01.15	CR
Gepr.	08.01.15	MO

Werkstoff/ MATERIAL Gewicht (kg):

Rohteil-Nr.: / RAW-PART No. Blatt 2

Fertigteil Nr.:/FINISH-PART No. Typ ZF 0546041 0.1363

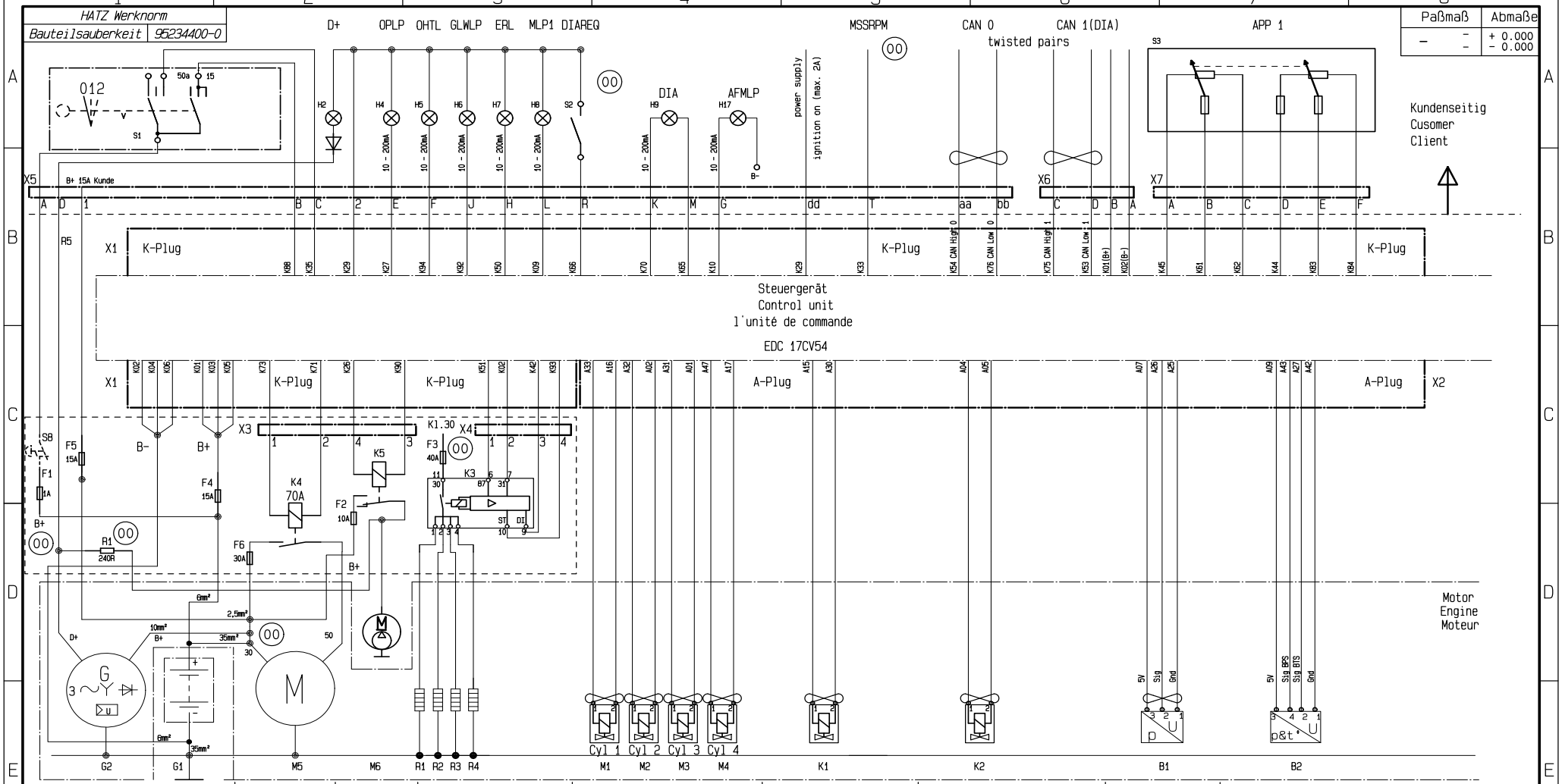
HATZ Werknorm
Bauteilsauberkeit 95234400-0
Paßmaß
Abmaße
D+ OPLP OHTL GLWLP ERL MLP1 DIAREQ
MSSRPM
CAN 0
CAN 1(DIA)
twisted pairs
APP 1
DIA
AFMLP
power supply
ignition on (max. 2A)
Kundenseitig
Cusomer
Client
X5
B+ 15A Kunde
X6
X7
K-Plug
Steuergerät
Control unit
l'unité de commande
EDC 17CV54
A-Plug
X1
X2
X3
X4
Motor
Engine
Moteur
Cyl 1 Cyl 2 Cyl 3 Cyl 4
G2 G1 M5 M6 R1 R2 R3 R4 M1 M2 M3 M4 K1 K2 B1 B2
Stromversorgung / Ladeeinrichtung
Power supply / Charging device
Alimentation electr. / Chargeur
Starteinrichtung
Starting device
Dispos. de demarr.
Kraftstoffpumpe
Fuel pump
Pompe à carburant
Vorglühen
Preheating
Prechauffage
Injektoren
Injectors
Injecteurs
Druckregelventil
Rail pressure control valve
clapet de surpression de rampe d'injection
Hochdruckpumpe mit Zumesseinheit
High pressure pump & metering unit
Pompe à haute pression avec l'unité de dosage
Raildrucksensor
Rail pressure sensor
capteur de pression de rampe d'injetion
Ladedruck-& Temp. Sensor
Boost pressure & temp. sensor
Pression de suralimentation et capteur de température
Achtung:Gewährleistungsverlust bei Veränderung der Schaltung oder Verdrahtung ohne Rücksprache mit dem Werk! - Warning: Loss of warranty when changing the circuit or wiring without consulting the factory!
T15/K88 darf ausschließlich als Signaleingang für "Zündung Ein" am Steuergerät verwendet werden! - T15/K88 has to be used only for the input signal "ignition on" on the control unit!
Als Spannungsversorgung Kundenseitig ("Zündung Ein" K1.15) ist K29(max 2A) zu verwenden! - For customer power supply ("ignition on" K1.15) use only K29(max 2A) Nach Zündung aus hat K29 einen Nachlauf von 15 Sek. - after ignition off K29 is delayed for 15 sec..
6x 00 16.03.15 CR H.15/037
Anz Nr. Datum Name Änderung
NICHT MANUELL ÄNDERN
Oberflächenbeschaffenheit
SURFACE ROUGHNESS
DIN EN ISO 1302 Reihe 2
Werkstückkanten DIN ISO 13715
EDGES OF WORKING PARTS
Allgemeintoleranzen
GENERAL TOLERANCES
DIN ISO 2768 - m
Form- u. Lagetolerierung
GEOMETRICAL TOLERANCING
DIN ISO 1101
Schutzvermerk
PROTECTION MARK
nach/ACC. TO DIN ISO 16016
HATZ DIESEL
MOTORENFABRIK HATZ RUHSTORF-ROTT
Stromlaufplan
Standard 12V
4H50TIC
Maßstab/SCALE 1:1 (:)
ISO E
CAD Datum Name
Gez. 16.03.15 CR
Gepr. 16.03.15 MO
Werkstoff/MATERIAL Gewicht (kg):
Rohteil-Nr.: / RAW-PART No.
B1att 1
Fertigteil Nr.:/FINISH-PART No. Typ ZF
05460420.1363

HATZ Werknorm	
Bauteilsauberkeit	95234400-0

Paßmaß	Abmaße
– – –	+ 0.000 - 0.000

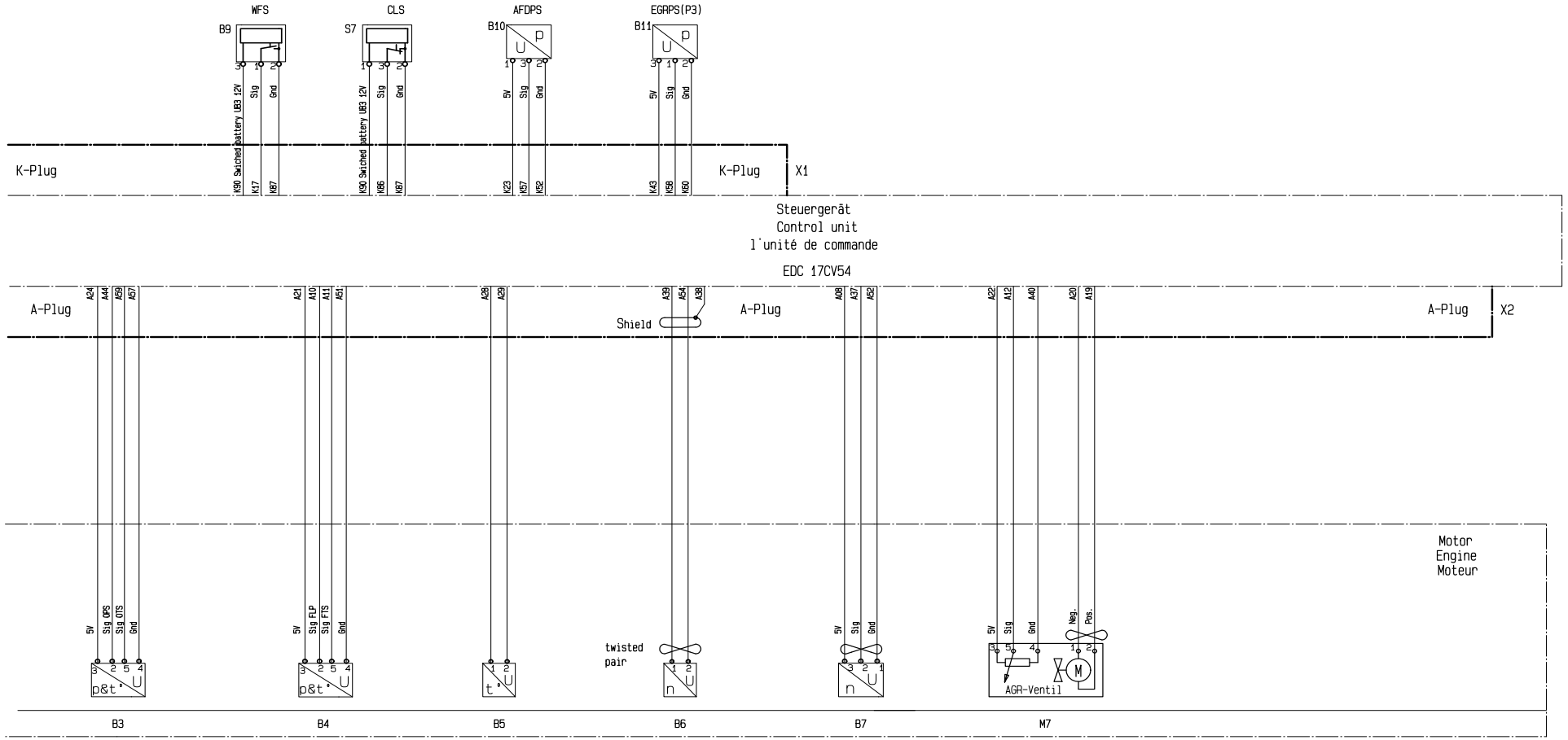

Öldruck-und Temp. Sensor Oil pressure & temp. sensor Pression d'huile et le capteur de température	Kraftstoff Niederduck & Temp. Sensor Fuel low pressure & temp. sensor Capteur et la température de combustible à basse pression	Kühlmitteltemp. Sensor Coolant temp. sensor Capteur de température de liquide de refroidissement	Kurbelwellen-Drehzahlsensor Crankshaft speed sensor Capteur de vitesse de vilebrequin	Nockenwellen-Drehzahlsensor Camshaft speed sensor Capteur de vitesse de l'arbre à cames	AGR Ventil EGR valve Soupape de recirculation des gaz d'échappement

Achtung:Gewährleistungsverlust bei Veränderung der Schaltung oder Verdrahtung ohne Rücksprache mit dem Werk! - Warning: Loss of warranty when changing the circuit or wiring without consulting the factory!

T15/K88 darf ausschließlich als Signaleingang für "Zündung Ein" am Steuergerät verwendet werden! - T15/K88 has to be used only for the input signal "ignition on" on the control unit!

Als Spannungsversorgung Kundenseitig ("Zündung Ein" K1.15) ist K29(max 2A) zu verwenden! - For customer power supply ("ignition on" K1.15) use only K29(max 2A) Nach Zündung aus hat K29 einen Nachlauf von 15 Sek. - after ignition off K29 is delayed for 15 sec..

Anz	Nr.	Datum	Name	Änderung
4x	00	16.03.15	CR	H.15/037

NICHT MANUELL ÄNDERN

Oberflächenbeschaffenheit *SURFACE ROUGHNESS* DIN EN ISO 1302 Reihe 2

Werkstückkanten DIN ISO 13715 *EDGES OF WORKING PARTS*

Allgemeintoleranzen *GENERAL TOLERANCES* DIN ISO 2768 - m

Form- u. Lagetolerierung *GEOMETRICAL TOLERANCING* DIN ISO 1101

Schutzvermerk *PROTECTION MARK* nach/*ACC. TO* DIN ISO 16016

HATZ DIESEL

MOTORENFABRIK HATZ RUHSTORF-ROTT

Stromlaufplan

Standard 12V

4H50TIC

Maßstab/SCALE 1:1 (:)

ISO E

CAD	Datum	Name
Gez.	16.03.15	CR
Gepr.	16.03.15	MO

Werkstoff/*MATERIAL* Gewicht (kg):

Rohteil-Nr.: / RAW-PART No. Blatt 2

Fertigteil Nr.:/FINISH-PART No. Typ ZF 0546042 0.1363

HATZ Werknorm
Bauteilsauberkeit 95234400-0

Paßmaß	Abmaße
–	+ 0.000 - 0.000

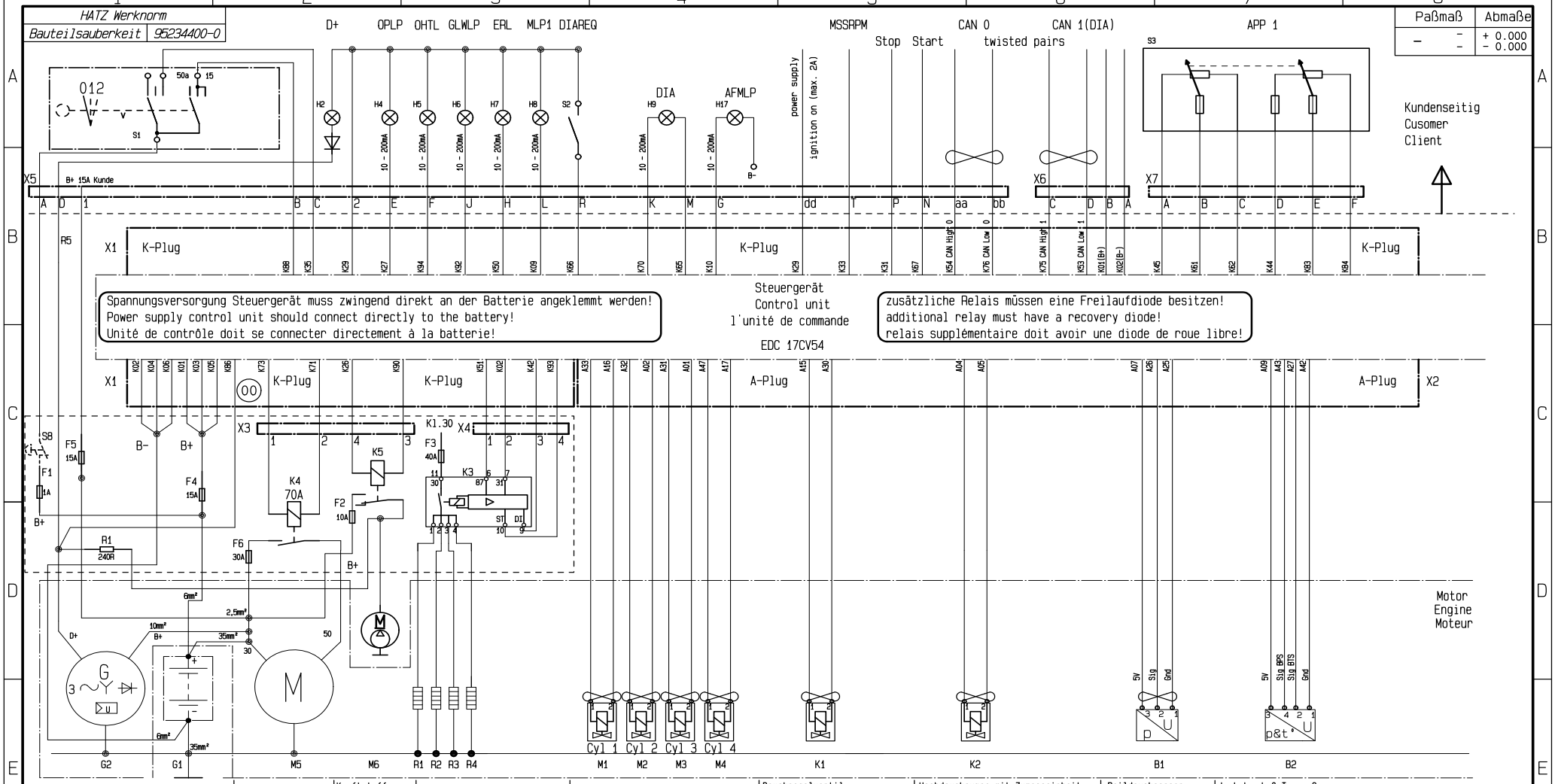

Stromversorgung / Ladeeinrichtung Power supply / Charging device Alimentation electr. / Chargeur	Starteinrichtung Starting device Dispos. de demarr.	Kraftstoffpumpe Fuel pump Pompe à carburant	Vorglühen Preheating Prechauffage	Injektoren Injectors Injecteurs	Druckregelventil Rail pressure control valve clapet de surpression de rampe d'injection	Hochdruckpumpe mit Zumesseinheit High pressure pump & metering unit Pompe à haute pression avec l'unité de dosage	Raildrucksensor Rail pressure sensor capteur de pression de rampe d'injetion	Ladedruck-& Temp. Sensor Boost pressure & temp. sensor Pression de suralimentation et capteur de température

Achtung:Gewährleistungsverlust bei Veränderung der Schaltung oder Verdrahtung ohne Rücksprache mit dem Werk! - Warning: Loss of warranty when changing the circuit or wiring without consulting the factory!

T15/K88 darf ausschließlich als Signaleingang für "Zündung Ein" am Steuergerät verwendet werden! - T15/K88 has to be used only for the input signal "ignition on" on the control unit!

Als Spannungsversorgung Kundenseitig ("Zündung Ein" Kl.15) ist K29(max 2A) zu verwenden! - For customer power supply ("ignition on" Kl.15) use only K29(max 2A) Nach Zündung aus hat K29 einen Nachlauf von 15 Sek. - after ignition off K29 is delayed for 15 sec..

Anz	Nr.	Datum	Name	Änderung
	01	24.08.16	CR	H.16/074
1x	00	17.05.16	CR	H.16/052

NICHT MANUELL ÄNDERN

Oberflächenbeschaffenheit
SURFACE ROUGHNESS
DIN EN ISO 1302 Reihe 2

Werkstückkanten DIN ISO 13715
EDGES OF WORKING PARTS

Allgemeintoleranzen
GENERAL TOLERANCES
DIN ISO 2768 - m

Form- u. Lagetolerierung
GEOMETRICAL TOLERANCING
DIN ISO 1101

Schutzvermerk
PROTECTION MARK
nach/ACC. TO DIN ISO 16016

HATZ DIESEL
MOTORENFABRIK HATZ RUHSTORF-ROTT

Stromlaufplan
Standard 12V
4H50TIC V710

Maßstab/SCALE 1:1 (:) ISO E

CAD	Datum	Name
Gez.	17.05.16	CR
Gepr.	17.05.16	MO

Werkstoff/MATERIAL Gewicht (kg):

Rohteil-Nr.: / RAW-PART No.
B|l|a|t|t| |1| | | | |

Fertigteil Nr.:/FINISH-PART No. Typ ZF
0|5|4|6|0|4|3|0|.|1|3|6|3

HATZ Werknorm
Bauteilsauberkeit

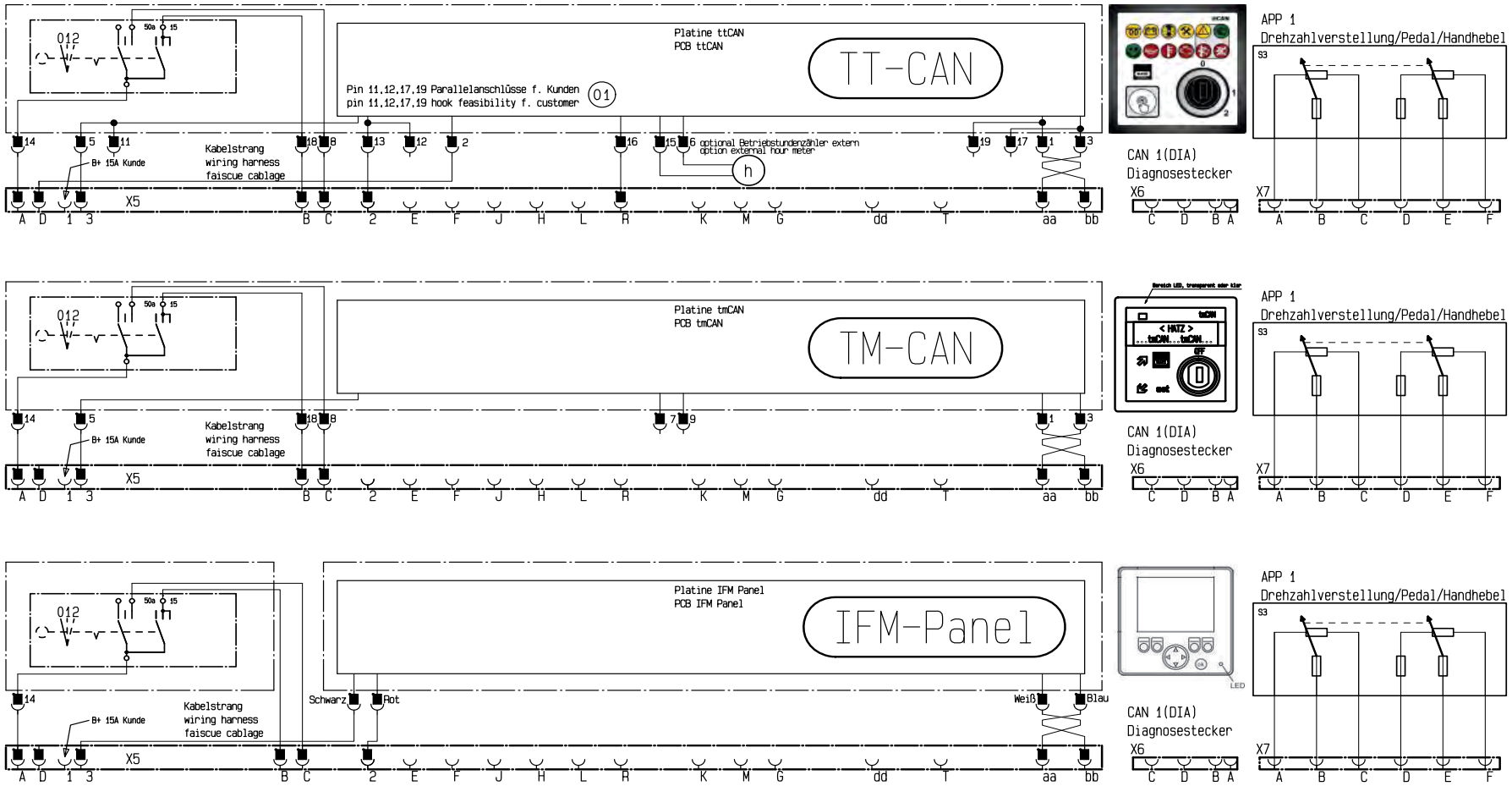

Achtung:Gewährleistungsverlust bei Veränderung der Schaltung oder Verdrahtung ohne Rücksprache mit dem Werk! - Warning: Loss of warranty when changing the circuit or wiring without consulting the factory!

T15/K88 darf ausschließlich als Signaleingang für "Zündung Ein" am Steuergerät verwendet werden! - T15/K88 has to be used only for the input signal "ignition on" on the control unit!

Als Spannungsversorgung Kundenseitig ("Zündung Ein" K1.15) ist K29(max 2A) zu verwenden! - For customer power supply ("ignition on" K1.15) use only K29(max 2A) Nach Zündung aus hat K29 einen Nachlauf von 15 Sek. - after ignition off K29 is delayed for 15 sec..

Anz	Nr.	Datum	Name	Änderung
	01	24.08.16	CR	H.16/074
	00	17.05.16	CR	H.16/052

NICHT MANUELL ÄNDERN

Oberflächenbeschaffenheit
SURFACE ROUGHNESS
DIN EN ISO 1302 Reihe 2

Werkstückkanten DIN ISO 13715
EDGES OF WORKING PARTS

Allgemeintoleranzen
GENERAL TOLERANCES
DIN ISO 2768 - m

Form- u. Lagetolerierung
GEOMETRICAL TOLERANCING
DIN ISO 1101

Schutzvermerk
PROTECTION MARK
nach/*ACC.TO* DIN ISO 16016

HATZ DIESEL
MOTORENFABRIK HATZ RUHSTORF-ROTT

Stromlaufplan
Standard 12V
4H50TIC V710

Maßstab/SCALE 1:1 (:) CAD

ISO E

	Datum	Name
Gez.	17.05.16	CR
Gepr.	17.05.16	MO

Werkstoff/*MATERIAL* Gewicht (kg):

Rohteil-Nr.: / RAW-PART No.
B|L|A|T|T| |1|A| | | | |

Fertigteil Nr.:/FINISH-PART No. Typ ZF
0|5|4|6|0|4|3|0|.|1|3|6|3

HATZ Werknorm
Bauteilsauberkeit | 95234400-0

Paßmaß	Abmaße
–	+ 0.000 - 0.000

nur für Cruise control Version - Verdrahtung Kundenseits
only for cruise control version - wiring by customer
uniquement pour la version du régulateur de vitesse - câblage par le client

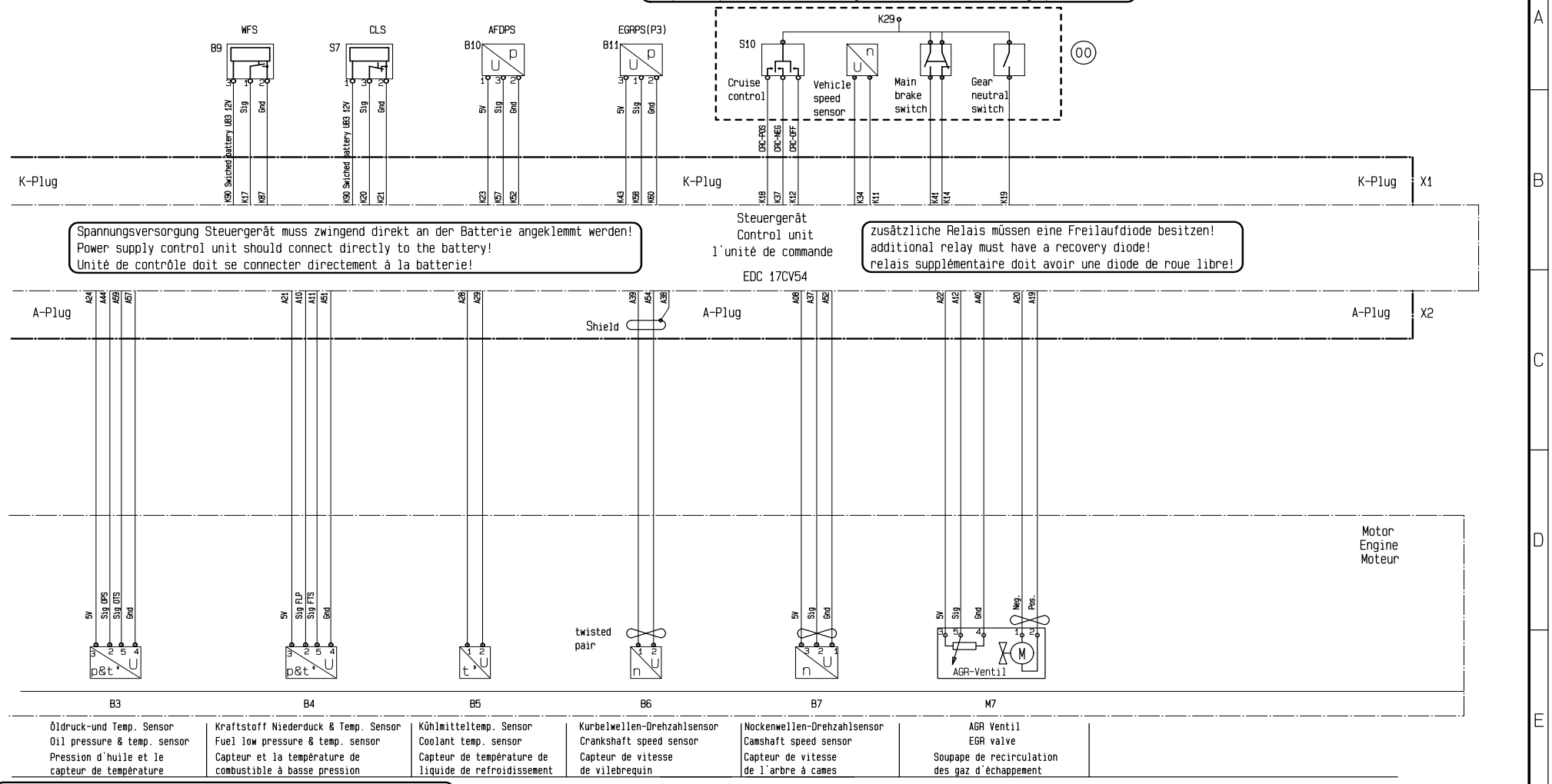

Öldruck-und Temp. Sensor	Kraftstoff Niederduck & Temp. Sensor	Kühlmitteltemp. Sensor	Kurbelwellen-Drehzahlsensor	Nockenwellen-Drehzahlsensor	AGR Ventil
Oil pressure & temp. sensor	Fuel low pressure & temp. sensor	Coolant temp. sensor	Crankshaft speed sensor	Camshaft speed sensor	EGR valve
Pression d'huile et le capteur de température	Capteur et la température de combustible à basse pression	Capteur de température de liquide de refroidissement	Capteur de vitesse de vilebrequin	Capteur de vitesse de l'arbre à cames	Soupape de recirculation des gaz d'échappement

Achtung:Gewährleistungsverlust bei Veränderung der Schaltung oder Verdrahtung ohne Rücksprache mit dem Werk! - Warning: Loss of warranty when changing the circuit or wiring without consulting the factory!

T15/K88 darf ausschließlich als Signaleingang für "Zündung Ein" am Steuergerät verwendet werden! - T15/K88 has to be used only for the input signal "ignition on" on the control unit!

Als Spannungsversorgung Kundenseitig ("Zündung Ein" K1.15) ist K29(max 2A) zu verwenden! - For customer power supply ("ignition on" K1.15) use only K29(max 2A) Nach Zündung aus hat K29 einen Nachlauf von 15 Sek. - after ignition off K29 is delayed for 15 sec..

Anz	Nr.	Datum	Name	Änderung
	01	24.08.16	CR	H.16/074
1x	00	17.05.16	CR	H.16/052

NICHT MANUELL ÄNDERN

Oberflächenbeschaffenheit
SURFACE ROUGHNESS
DIN EN ISO 1302 Reihe 2

Werkstückkanten DIN ISO 13715
EDGES OF WORKING PARTS

Allgemeintoleranzen
GENERAL TOLERANCES
DIN ISO 2768 - m

Form- u. Lagetolerierung
GEOMETRICAL TOLERANCING
DIN ISO 1101

Schutzvermerk
PROTECTION MARK
nach/ACC. TO DIN ISO 16016

HATZ DIESEL
MOTORENFABRIK HATZ RUHSTORF-ROTT

Stromlaufplan
Standard 12V
4H50TIC V710

Maßstab/SCALE 1:1 (:) ISO E

CAD	Datum	Name
Gez.	17.05.16	CR
Gepr.	17.05.16	MO

Werkstoff/MATERIAL Gewicht (kg):

Rohteil-Nr.: / RAW-PART No.
Blatt 2

Fertigteil Nr.:/FINISH-PART No. Typ ZF
05460430.1363

B1 Raildrucksensor
Railpressuresensor
Capteur pression rail
B2 Ladedruck-& Temperatursensor
Boostpressure & temp. sensor
Capteur température et pression air de suralimentation
B3 Öldruck-& Temperatursensor
Oil pressure & temp. sensor
Capteur température et pression d'huile
B4 Kraftstoff Niederdruck & Temperatursensor
Fuel lowpressure & temp. sensor
Capteur température et basse pression carburant
B5 Kühlmitteltemperatursensor
Coolant temperature sensor
Capteur température liquide de refroidissement
B6 Kurbelwellendrehzahlsensor
Crankshaft speed sensor
Capteur régime vilebrequin
B7 Nockenwellendrehzahlsensor
Camshaft speed sensor
Capteur régime arbre à cames
B8 Umgebungstemperatursensor
Ambient temperature sensor
Capteur température ambiante
B9 Wasser in Kraftstoffsensor
Water in fuel sensor
Capteur d'eau dans carburant
B10 Luftfilter Differenzdruck Sensor
Air cleaner differential pressure sensor
Capteur pression différence du filtre à air
B11 AGR Drucksensor P3
EGR pressure sensor
Capteur pression EGR P3
B12 Fahrzeug-Geschwindigkeitssensor (nur für Cruise control)
Vehicle speed sensor (only for cruise control)
Capteur vitesse du véhicule (seulement pour Cruise Control)
F1 Sicherung T15 /T50
Fuse T15/50
Fusible T15/50
F2 Sicherung Kraftstoffpumpe
Fuse fuelpump
Fusible pompe d'alimentation carburant
F3 Sicherung Glühkerzen
Fuse glow plugs
Fusible bougies de préchauffage
F4 Sicherung Steuergerät B+
Fuse control unit B+
Fusible calculateur EDC17 B+
F5 Sicherung B+ Spannungsversorgung Kunde
Fuse B+ power supply customer
Fusible B+ alimentation courant client
F6 Sicherung Starter 50
Fuse starter 50
Fusible démarreur 50
G1 Starterbatterie
Starter battery
Batterie
G2 Drehstromgenerator
Battery charger
Alternateur triphasé

H2 Ladekontrolllampe
Charge control fault lamp
Lampe témoin de charge batterie
H4 Öldrucklampe
Oil pressure fault lamp
Lampe témoin de pression d'huile
H5 Übertemperaturlampe
Engine overtemperature fault lamp
Lampe témoin de surchauffe
H6 Vorglühanzeigelampe
Pre glow lamp
Lampe témoin préchauffage
H7 Motor läuft Anzeigelampe
Engine running lamp
Lampe témoin moteur en route
H8 Wartungs Anzeigelampe
Maintenance lamp
Lampe témoin d'entretien
H9 Diagnoselampe
Diagnistic lamp
Lampe témoin de diagnostique
H17 Luftfilterwartungsanzeigelampe
Air cleaner maintenance lamp
Lampe témoin d'entretien filtre à air
K1 Druckregelventil
Rail pressure control valve
Clapet de surpression de rampe
K2 Hochdruckpumpe mit Zumesseinheit
High pressure pump & metering unit
Pompe à haute pression avec l'unité de dosage
K3 Glühzeitsteuergerät
Glow control unit
Unité de contrôle systéme de préchauffage
K4 Starter Relais
Starter relais
Relais démarreur
K5 Relais für Kraftstoffförderpumpe
Fuelpump relais
Relais pompe d'alimentation carburant
M1 Injektor Zyl. 1
Injector Cyl. 1
Injecteur Cyl. 1
M2 Injektor Zyl. 2
Injector Cyl. 2
Injecteur Cyl. 2
M3 Injektor Zyl. 3
Injector Cyl. 3
Injecteur Cyl. 3
M4 Injektor Zyl. 4
Injector Cyl. 4
Injecteur Cyl. 4

M5 Anlasser
Starter motor
Démarreur
M6 Kraftstoffförderpumpe
Fuel pump
Pompe d'alimetation carburant
M7 AGR-Ventil
EGR valve
Vanne EGR
P1 Drehzahlmesser
Speed counter
Compte tours
R1 Widerstand zur Generatorerregung
Resistor for battery charger excitation
Résistance pour excitation alternateur
S1 Zündstartschalter
Ignition - start -switch
Clé de contact
S2 Diagnose Request Schalter
Diagnostic request switch
Interrupteur de demande de diagnostic
S3 Gaspedal-Drehzahlverstellung 1 (analog)
Acceleration pedal 1 (analog)
Réglage régime 1 (analogue)
S4 Startschalter (optional) zu B- (K87 / X5 - U)
Start switch (optional) to B- (K87 / X5 - U)
Bouton Start (option) sur B- (K87 / X5-U)
S5 Stopschalter (optional) zu B- (K87 / X5 - U)
Stop switch (optional) to B- (K87 / X5 - U)
Bouton Stop (option) sur B- (K87 / X5-U)
S6 Schalter für Mehrfachdrehzahl (optional)
Multi state switch(optional)
Commutateur pour plusieurs vitesses (MSS)
S7 Kühlmittelstand Schalter
Coolant level switch
Capteur niveau liquide de refroidissement
S8 Not-Aus - Verdrahtung Kundenseits
Emergency stop - wiring customer side
Arrêt d'urgence - Câblage par le client
S9 Ladekontrolle (nur CAN-Botschaft)
Alternator monitoring (only Can-message)
Surveillance alternteur (seulement signal CAN-Bus)
S10 Drehzahlregler
Cruise control
Régulateur de vitesse
S11 Handbremsschalter (nur für cruise control)
Main break switch (only for cruise control)
Interrupteur frein à main (seulement pour Cruise Control)
S12 Neutral-Gang-Schalter (nur für cruise control)
Gear neutral switch (only for cruise control)
Interrupteur de vitesse neutre (seulement pout Cruise Control)

HATZ Werknorm
Bauteilsauberkeit

X1 Steuergerätestecker Kundenseitig
Control unit plug customer side
Connecteur calculateur côté client
X2 Steuergerätestecker Motorseitig
Control unit plug engine side
Connecteur calculateur côté moteur
X3 Stecker for Starterrelais
u. Kraftstoffförderpumpenrelais
Plug for starter relay & fuel pump relay
Connecteur relais de démarrage et relais
pompe d'alimentation carburant
X4 Stecker zu Glühzeitsteuergerät
Plug for glow control unit
Connecteur unité de contrôle
système de préchauffage"
X5 Stecker für Kundensignale
Plug for customer signals
Connecteur signaux client
X6 CAN-Bus Diagnosestecker
Can bus diagnostic plug
Connecteur CAN-Bus diagnostique
X7 Stecker zu Gaspedal
Drehzahlverstellung (analog)
Acceleration pedal 1 (analog)
Connecteur réglage régime 1 (analogue)

Achtung:Gewährleistungsverlust bei Veränderung der Schaltung oder Verdrahtung ohne Rücksprache mit dem Werk!
Warning: Loss of warranty when changing the circuit or wiring without consulting the factory!
Attention : Perte de garantie en cas de changement du circuit ou câblage sans consulter l'usine!

T15/K88 darf ausschließlich als Signaleingang für "Zündung Ein" am Steuergerät verwendet werden!
T15/K88 has to be used only for the input signal "ignition on" on the control unit!
T15 / K88 doit être utilisé uniquement pour le signal d'entrée « Contact allumer » sur l'unité de commande!

Als Spannungsversorgung Kundenseitig ("Zündung Ein" Kl.15) ist K29(max 2A) zu verwenden!
For customer power supply ("ignition on" Kl.15) use only K29(max 2A)
Pour l'alimentation électrique du client (« Contact allumer » borne 15) utiliser uniquement K29 (max 2A).

Nach Zündung aus hat K29 einen Nachlauf von 15 Sek..
After ignition off K29 is delayed for 15 sec..
Après coupure du contact, K29 est retardée pendant 15 secondes.

Anz	Nr.	Datum	Name	Änderung
	01	24.08.16	CR	H.16/074
1x	00	17.05.16	CR	H.16/052

NICHT MANUELL ÄNDERN

Oberflächenbeschaffenheit
SURFACE ROUGHNESS
DIN EN ISO 1302 Reihe 2

Werkstückkanten DIN ISO 13715
EDGES OF WORKING PARTS

Allgemeintoleranzen
GENERAL TOLERANCES
DIN ISO 2768 - m

Form- u. Lagetolerierung
GEOMETRICAL TOLERANCING
DIN ISO 1101

Schutzvermerk
PROTECTION MARK
nach/ACC. TO DIN ISO 16016

HATZ DIESEL
MOTORENFABRIK HATZ RUHSTORF-ROTT

Stromlaufplan
Standard 12V
4H50TIC V710

Maßstab/SCALE 1:1 (:) CAD
ISO E

	Datum	Name
Gez.	17.05.16	CR
Gepr.	17.05.16	MO

Werkstoff/MATERIAL Gewicht (kg):

Rohteil-Nr.: / RAW-PART No.
Blatt 3

Fertigteil Nr.:/FINISH-PART No. Typ ZF
05460430.1363

X5

Nr.	Description	Assignment	Label
1	B+ 15A Spannungsversorgung Kunde B+ Power supply customer B+ alimentation courant client	1 - vom Sicherungsblock 1 - from fuse 1 - du fusible	1
2	geschaltetes B+ switched battery B+ B+ commandé 15	K29 - V8	24
3	B- - Masse Ground B- - masse	vom Massepunkt from Ground de la masse	0
4			
A	B+ 1A Spannungsversorgung T15/50 B+ 1A power supply T15/50 B+ alimentation courant T15/50	vom Sicherungsblock from fuse du fusible	1
B	Zündung Ein Klemme 15 ignition on clamp 15 Contact allumé borne 15	T15 - K88	15
C	Startsignal Klemme 50 startsignal clamp 50 Signal de démarrage borne 50	T50 - K35	50
D	Ladekontrolle alternator monitoring Contrôle de charge	Nr. 2 - K86	2
E	Öldruckmangel oil pressure fault Manque de pression d'huile	OPLP - K27(Lowside)	4
F	Übertemperatur Motor engine overtemperature fault Surchauffe moteur	OHTL - K94(Lowside)	5
G	Luftfilterwartungsschalter air cleaner maintenance switch commutateur de filtre à air	AFLMP - K10(Highside)	17
H	Motor läuft Lampe engine running lamp Lampe témoin moteur en route	ERL - K50(Lowside)	ML
J	Vorglüanzeige pre glow lamp Lampe témoin de préchauffage	GLWLP - K92(Lowside)	13
K	Diagnoselampe Highside diagnostic lamp highside Lampe témoin de diagnostic Highside	Dia - K70	Dia+
L	Wartungsintervall maintenance lamp Lampe témoin d'entretien	MLP1 - K09	MLP
M	Diagnoselampe Lowside diagnostic lamp lowside Lampe témoin de diagnistic lowside	Dia - K65	DIA-

Nr.	Description	Assignment	Label
N	Motor Start Schalter engine start switch Interrupteur démarrage moteur	ENGSA - K67	9
P	Motor Stop Schalter engine stop switch Interrupteur arrêt moteur	STP - K31	11
R	Diagnose Request Schalter diagnostic request switc Interrupteur diagnostic request	DIAREQ - K66	DR
S	Drehzahlsignal engine speed signal Signal régime	ENGN - K49	22
T	Drehzahlwahlschalter multi state switch Commutateur pour plusieurs vitesse (MSS)	MSSRPM - K33	14
U	Masse Digital Inputs ground digital inputs Masse entrée digitale	GR-DIG - K87	0
V	AGR/DPF Fehler Lowside EGR/DPF failure lowside Erreur EGR Lowside	AGR-ECU 55	
W	Regenerations Temp. zu niedrig (Lowside) regenerations temp. to low (lowside) Température regénération trop basse (Lowside)	AGR-ECU 57(RTN)	
aa	CAN 0 High (Kunden-CAN) CAN 0 high (customer-CAN) CAN 0 High (CAN-client)	CAN H 0 - K54	CAN +
bb	CAN 0 Low (Kunden-CAN) CAN 0 low (customer-CAN) CAN 0 Low (CAN-client)	CAN L 0 - K76	CAN-
cc	B-	0 vom Massepunkt 0 from ground 0 de la masse	0
dd	geschaltetes B+ switched battery B+ B+ commandé 15	K29 - V8	24

Achtung:Gewährleistungsverlust bei Veränderung der Schaltung oder Verdrahtung ohne Rücksprache mit dem Werk!
Warning: Loss of warranty when changing the circuit or wiring without consulting the factory!
Attention : Perte de garantie en cas de changement du circuit ou câblage sans consulter l'usine!

T15/K88 darf ausschließlich als Signaleingang für "Zündung Ein" am Steuergerät verwendet werden!
T15/K88 has to be used only for the input signal "ignition on" on the control unit!
T15 / K88 doit être utilisé uniquement pour le signal d'entrée « Contact allumer » sur l'unité de commande!

Als Spannungsversorgung Kundenseitig ("Zündung Ein" Kl.15) ist K29(max 2A) zu verwenden!
For customer power supply ("ignition on" Kl.15) use only K29(max 2A)
Pour l'alimentation électrique du client (« Contact allumer » borne 15) utiliser uniquement K29 (max 2A).

Nach Zündung aus hat K29 einen Nachlauf von 15 Sek..
After ignition off K29 is delayed for 15 sec..
Après coupure du contact, K29 est retardée pendant 15 secondes.

X3

Pin	Assignment	Control Unit EDC
1	Starter Relais Kl. 86 starter relais highside - 86 Relais démarreur borne 86	K73
2	Starter Relais Kl. 85 starter relais lowside - 85 Relais démarreur borne 85	K71
3	Kraftstoffförderpumpen Relais Kl. 85 fuelpump relais lowside - 85 Relais pompe d'alimentation carburant borne 85	K90
4	Kraftstoffförderpumpen Relais Kl. 86 fuelpump relais highside - 86 Relais pompe d'alimentation carburant borne 86	K53

X4

Pin	Assignment	Control Unit EDC
1	Spannungsversorgung GCU power supply GCU Alimentation courant GCU	K51
2	Masse GCU ground GCU Masse GCU	K02
3	Diagnose Ausgang GCU diagnostic output GCU Sortie diagnostique GCU	K42
4	Steuereingang GCU control input GCU Entrée de commande GCU	K93

HATZ Werknorm
Bauteilsauberkeit

X1 Bosch 1 928 A00 325 94 Pin Codierung C Rechts
X2 Bosch 1 928 A00 325 60 Pin Codierung C Links
X3 Deutsch DTM 06-4S
X4 Deutsch DTM 04-4P
X5 ITT Canon Trident 4-28
X6 Deutsch HD10-9-1939PE
X7 ITT Canon Trident 0-12

Anz	Nr.	Datum	Name	Änderung
	01	24.08.16	CR	H.16/074
	00	17.05.16	CR	H.16/052

NICHT MANUELL ÄNDERN

Oberflächenbeschaffenheit
SURFACE ROUGHNESS
DIN EN ISO 1302 Reihe 2

Werkstückkanten DIN ISO 13715
EDGES OF WORKING PARTS

Allgemeintoleranzen
GENERAL TOLERANCES
DIN ISO 2768 - m

Form- u. Lagetolerierung
GEOMETRICAL TOLERANCING
DIN ISO 1101

Schutzvermerk
PROTECTION MARK
nach/ACC. TO DIN ISO 16016

HATZ DIESEL
MOTORENFABRIK HATZ RUHSTORF-ROTT

Stromlaufplan
Standard 12V
4H50TIC V710

Maßstab/SCALE 1:1 (:)
ISO E

CAD	Datum	Name
Gez.	17.05.16	CR
Gepr.	17.05.16	MO

Werkstoff/MATERIAL Gewicht (kg):

Rohteil-Nr.: / RAW-PART No.
Blatt 4

Fertigteil Nr.:/FINISH-PART No. Typ ZF
05460430.1363

HATZ Werknorm
Bauteilsauberkeit

Achtung:Gewährleistungsverlust bei Veränderung der Schaltung oder Verdrahtung ohne Rücksprache mit dem Werk!
Warning: Loss of warranty when changing the circuit or wiring without consulting the factory!
Attention : Perte de garantie en cas de changement du circuit ou câblage sans consulter l'usine!

T15/K88 darf ausschließlich als Signaleingang für "Zündung Ein" am Steuergerät verwendet werden!
T15/K88 has to be used only for the input signal "ignition on" on the control unit!
T15 / K88 doit être utilisé uniquement pour le signal d'entrée « Contact allumer » sur l'unité de commande!

Als Spannungsversorgung Kundenseitig ("Zündung Ein" K1.15) ist K29(max 2A) zu verwenden!
For customer power supply ("ignition on" K1.15) use only K29(max 2A)
Pour l'alimentation électrique du client (« Contact allumer » borne 15) utiliser uniquement K29 (max 2A).

Nach Zündung aus hat K29 einen Nachlauf von 15 Sek..
After ignition off K29 is delayed for 15 sec..
Après coupure du contact, K29 est retardée pendant 15 secondes.

Sicherungen - Fuses - Fusibles

Steckplatz Place	Ampere	Bezeichnung Term Désignation	Verwendung Application Utilisation
A	15A	F4	Versorgungsspannung Steuergerät Power supply control unit Alimentation courant calculateur
B	1A	F1	Eingang T15/50 Steuergerät Input T15/50 control unit Entrée T15/T50 calculateur
C	40A	F3	Glühkerzen Glow plugs Bougies de préchauffage
D	15A	F5	Spannungsversorgung Kunde Power supply customer Alimentation courant client
E	10A	F2	Kraftstoffpumpe Fuel pump Pompe d'alimentation carburant
F	30A	F6	Anlasser Starter motor Démarreur

X6

Pin	Assignment	Control Unit EDC
A	Ground	K02
B	B+ (15A)	K01
C	CAN1 High (DIA)	K75
D	CAN1 Low (DIA)	K53

X7

Pin	Assignment	Control Unit EDC
A	O_V_5V_APP1 - supply +5V	K45
B	I_A_APP1 - signal 0,5V - 4,5V	K61
C	G_R_APP1 - ground	K62
D	O_V_5V_APP2 - supply +5V	K44
E	I_A_APP2 - signal 0,25V - 2,25V	K83
F	G_R_APP2 - ground	K84

Anz	Nr.	Datum	Name	Änderung
	01	24.08.16	CR	H.16/074
	00	17.05.16	CR	H.16/052

NICHT MANUELL ÄNDERN

Oberflächenbeschaffenheit
SURFACE ROUGHNESS
DIN EN ISO 1302 Reihe 2

Werkstückkanten DIN ISO 13715
EDGES OF WORKING PARTS

Allgemeintoleranzen
GENERAL TOLERANCES
DIN ISO 2768 - m

Form- u. Lagetolerierung
GEOMETRICAL TOLERANCING
DIN ISO 1101

Schutzvermerk
PROTECTION MARK
nach/ACC.TO DIN ISO 16016

HATZ DIESEL
MOTORENFABRIK HATZ RUHSTORF-ROTT

Stromlaufplan
Standard 12V
4H50TIC V710

Maßstab/SCALE 1:1 (:)
ISO E

CAD	Datum	Name
Gez.	17.05.16	CR
Gepr.	17.05.16	MO

Werkstoff/ MATERIAL Gewicht (kg):

Rohteil-Nr.: / RAW-PART No.
Blatt 5

Fertigteil Nr.:/FINISH-PART No. Typ ZF
05460430.1363

CAN speed adjustment H50

Hand lever

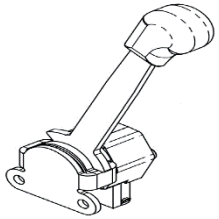

Gas pedal

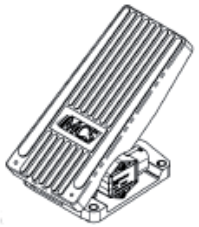

Gas rotary knob

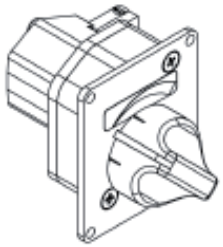

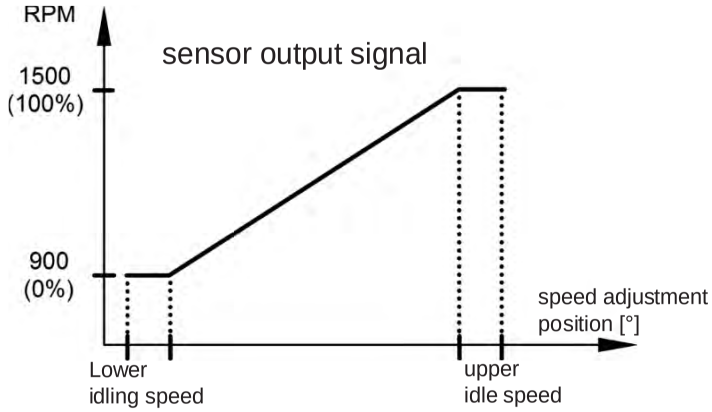

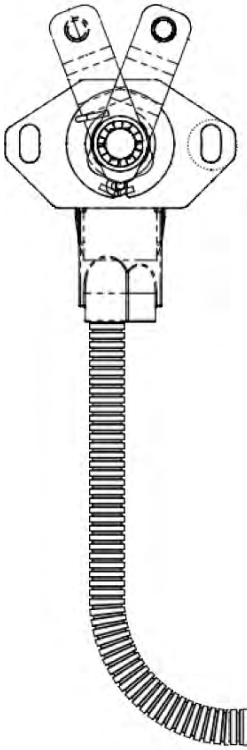

Connection
CAN speed adjustment

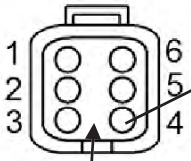

Pin No.	Pin assignment	Pin
1	Supply B -	cc
2	Supply B +	dd
3	CAN high	aa
4	CAN low	bb
5	shield	-
6	not assigned	-

custom cabling

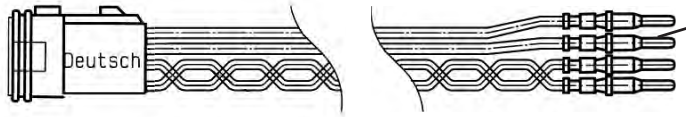

motor connector
Customer control unit

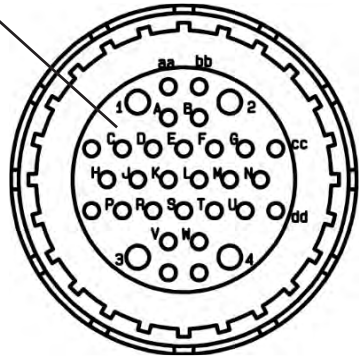

Analog speed adjustment H50

Hand lever

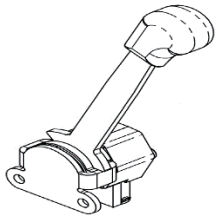

Gas pedal

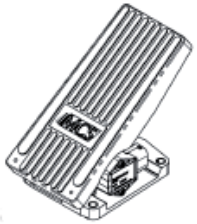

Gas rotary knob

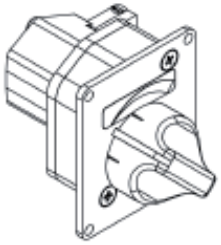

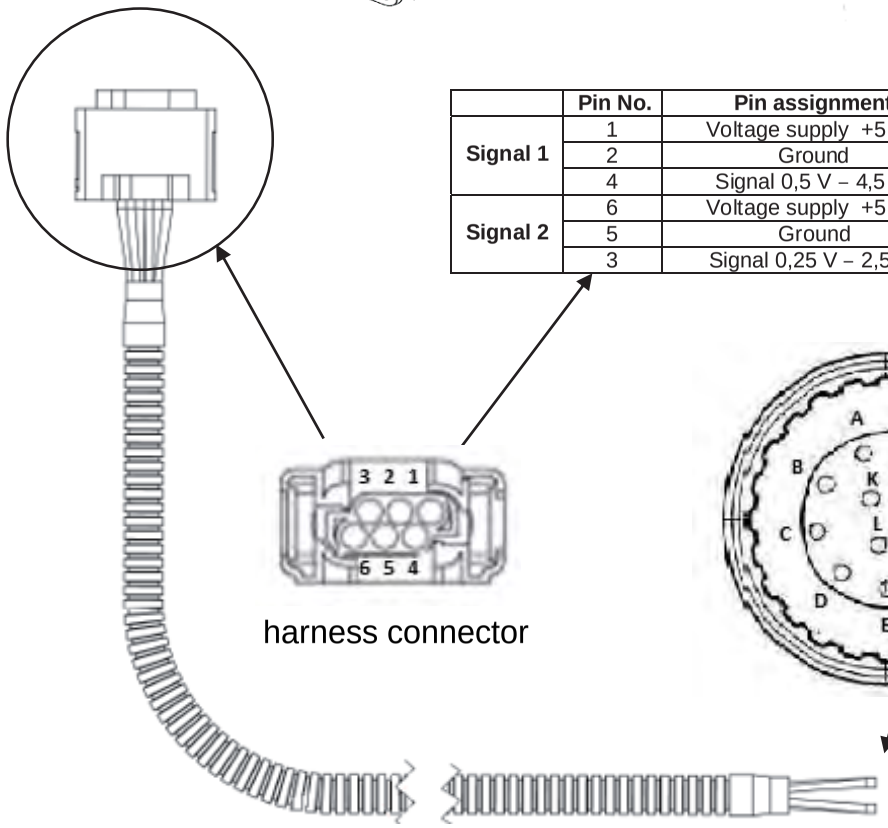

	Pin No.	Pin assignment	Farbe	Pin
Signal 1	1	Voltage supply +5 V	Rot	A
	2	Ground	Blau	C
	4	Signal 0,5 V – 4,5 V	Braun	B
Signal 2	6	Voltage supply +5 V	Orange	D
	5	Ground	Schwarz	F
	3	Signal 0,25 V – 2,5 V	Grün	E

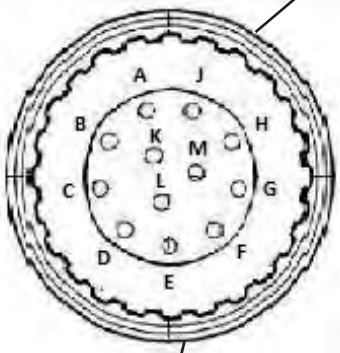

sensor output signal

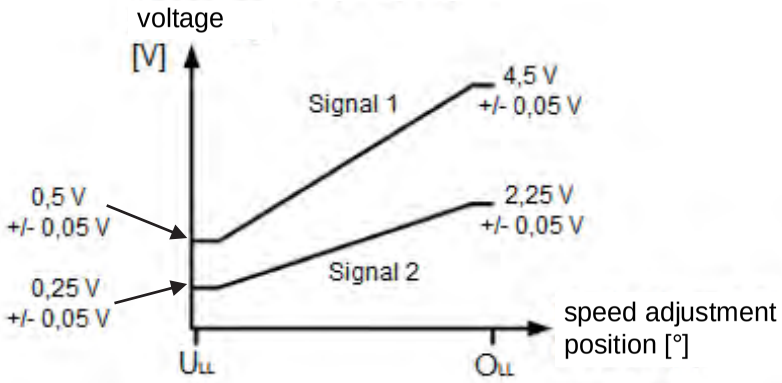

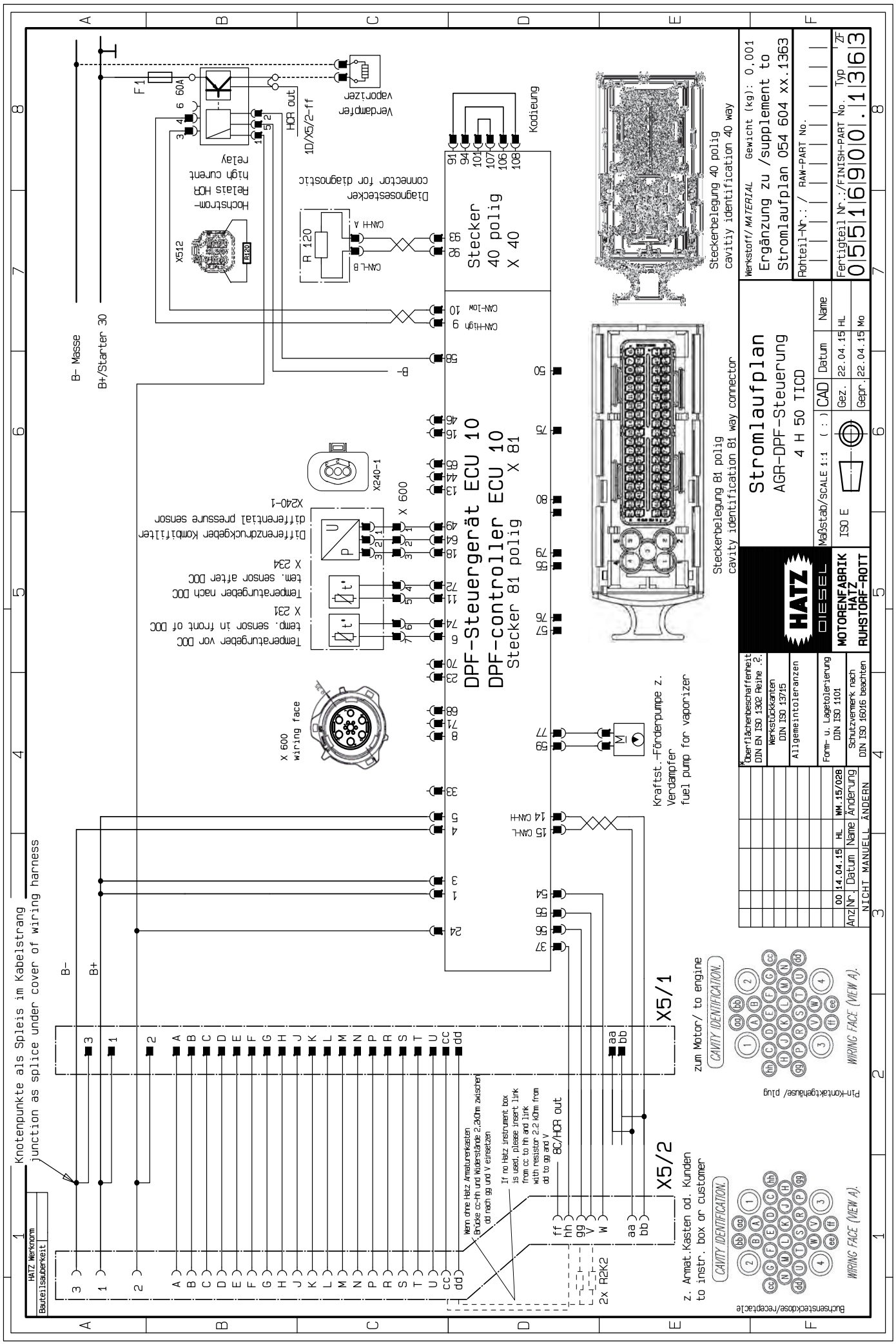
Stromlaufplan
AGR-DPF-Steuerung
4 H 50 TICD
HATZ DIESEL
MOTORENFABRIK HATZ RUHSTORF-ROTT
DPF-Steuergerät ECU 10
DPF-controller ECU 10
Stecker 81 polig
X 81
Stecker 40 polig X 40
Kodieung
Verdampfer vaporizer
HCR out
1D/X5/2-ff
Hochstrom-Relais HCR high current relay
X512
R 120
Diagnosestecker connector for diagnostic
CAN-H A
CAN-L B
CAN-High g
CAN-Low
B- Masse
B+/Starter 30
F1 60A
X240-1
X 600
Differenzdruckgeber Kombifilter differential pressure sensor
X 234
Temperaturgeber nach DOC temp. sensor after DOC
X 231
Temperaturgeber vor DOC temp. sensor in front of DOC
X 600 wiring face
Kraftst.-Förderpumpe z. Verdampfer fuel pump for vaporizer
Steckerbelegung 40 polig cavity identification 40 way
Steckerbelegung 81 polig cavity identification 81 way connector
Knotenpunkte als Spleis im Kabelstrang junction as splice under cover of wiring harness
X5/1
X5/2
zum Motor/ to engine
CAVITY IDENTIFICATION
WIRING FACE (VIEW A)
Pin-Kontaktgehäuse/ plug
Buchsensteckdose/receptacle
z. Armat.Kasten od. Kunden to instr. box or customer
Wenn ohne Hatz Armaturenkasten Brücke cc-hh und Widerstände 2,2kOhm zwischen dd nach gg und V einsetzen
If no Hatz instrument box is used, please insert link from cc to hh and link with resistor 2.2 kOhm from dd to gg and V
SC/HCR out
2x R2K2
Werkstoff/MATERIAL
Gewicht (kg): 0,001
Ergänzung zu /supplement to Stromlaufplan 054 604 xx.1363
Rohteil-Nr.: / RAW-PART No.
Fertigteil Nr.:/FINISH-PART No.
Typ ZF
0551690 0.1363
Maßstab/SCALE 1:1
ISO E
CAD
Gez. 22.04.15 HL
Gepr. 22.04.15 Mo
Datum
Name
Oberflächenbeschaffenheit DIN EN ISO 1302 Reihe .2.
Werkstückkanten DIN ISO 13715
Allgemeintoleranzen
Form- u. Lagetolerierung DIN ISO 1101
Schutzvermerk nach DIN ISO 16016 beachten
WM.15/028
Änderung
NICHT MANUELL ÄNDERN
HATZ Werknorm
Bauteilsauberkeit

Cable routing DPF

HATZ

HATZ
DIESEL

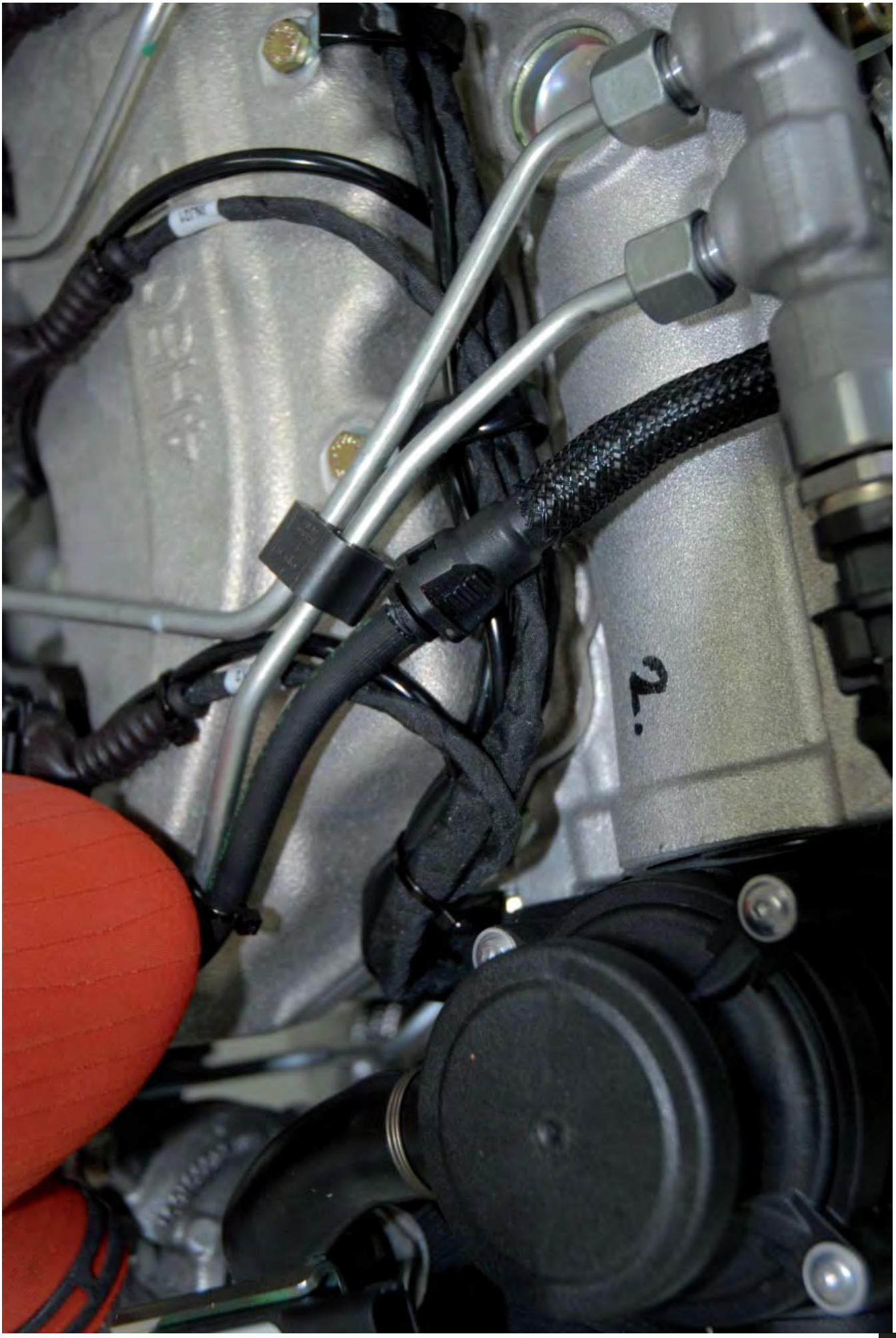

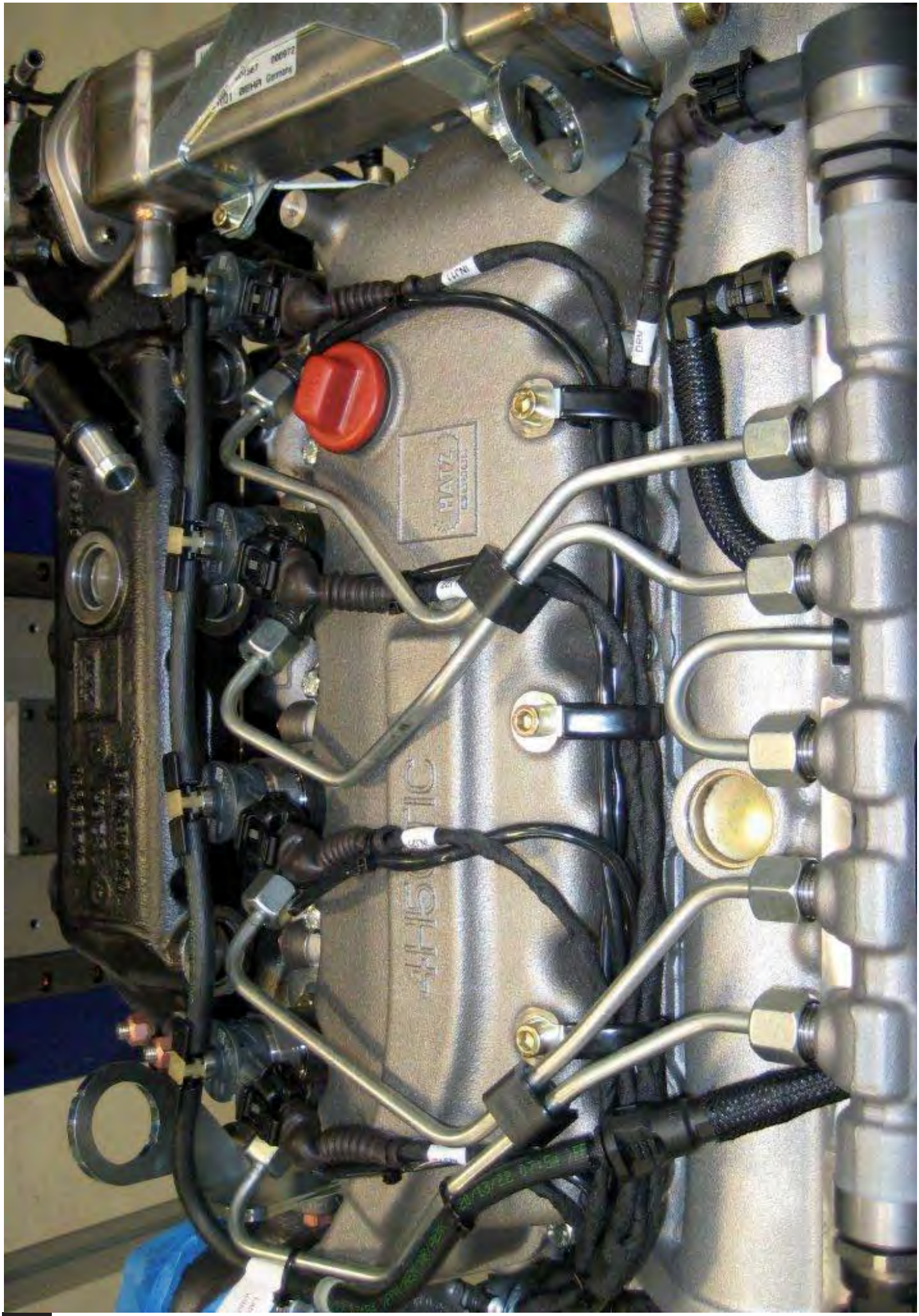

4HF50
HOYA
H6274
1429970
3015041
GJS-500

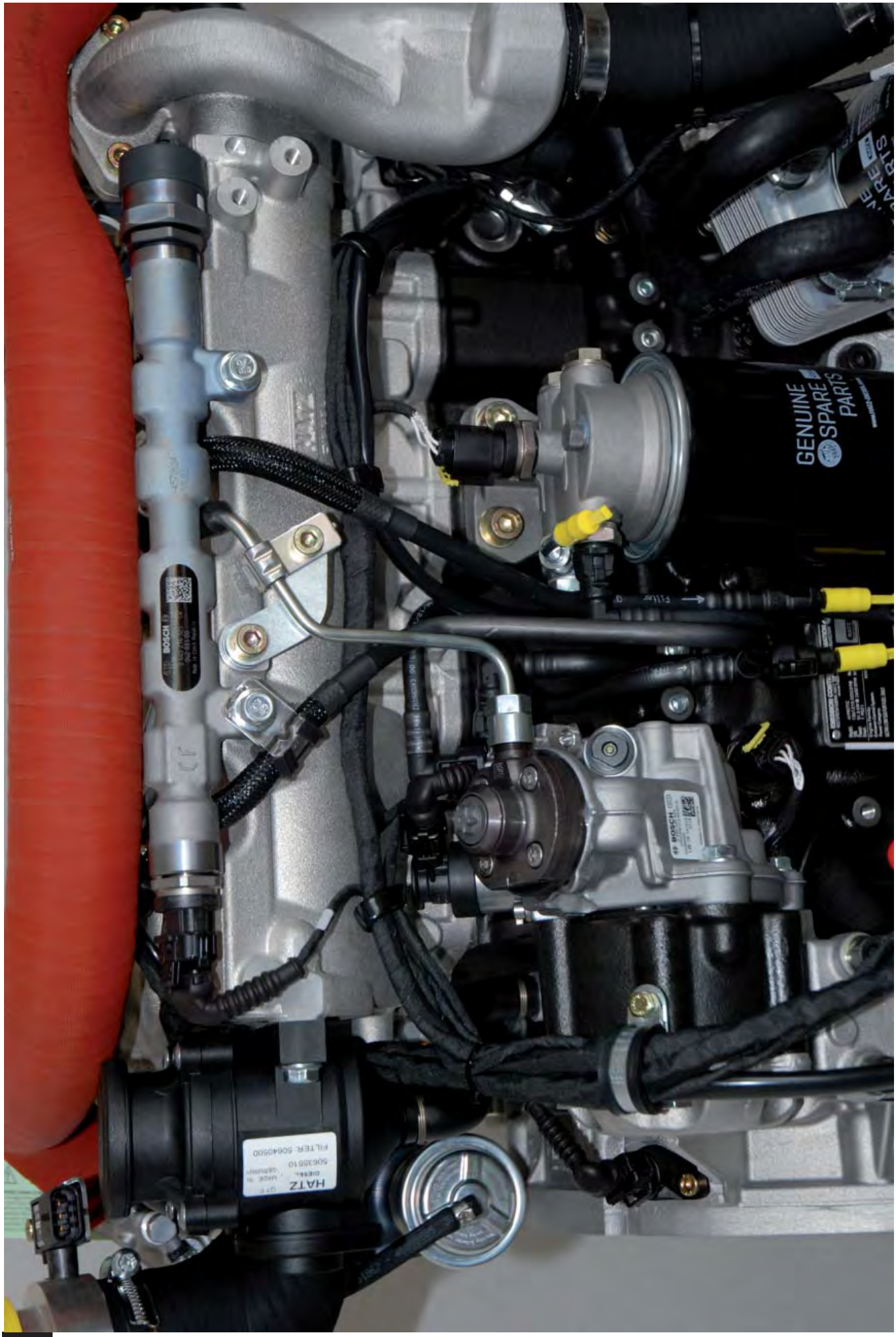
GENUINE
SPARE
PARTS
BOSCH
HATZ
FILTER 50640500

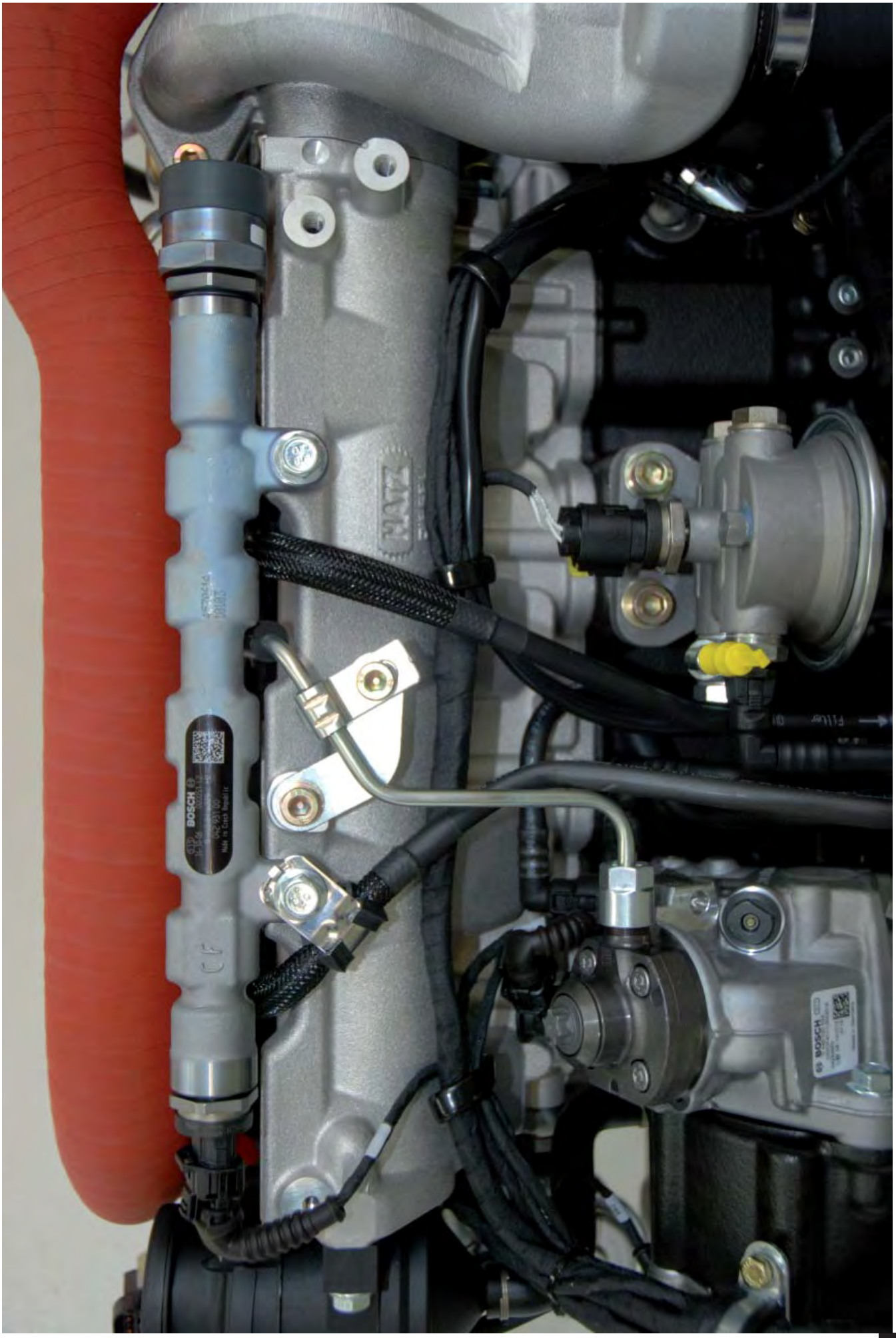
BOSCH
BOSCH

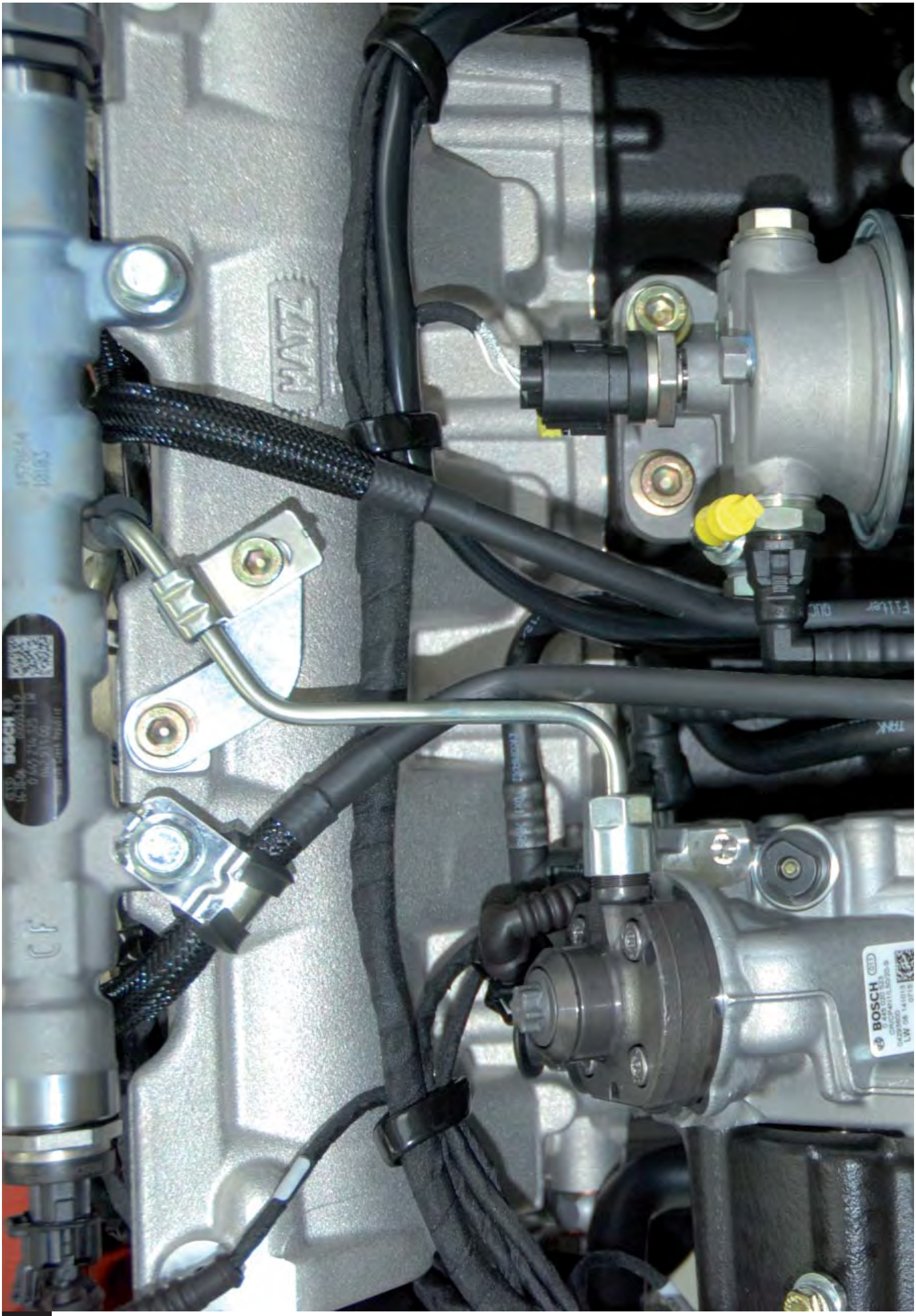
BOSCH
BOSCH

GENUINE
SPARE
PARTS

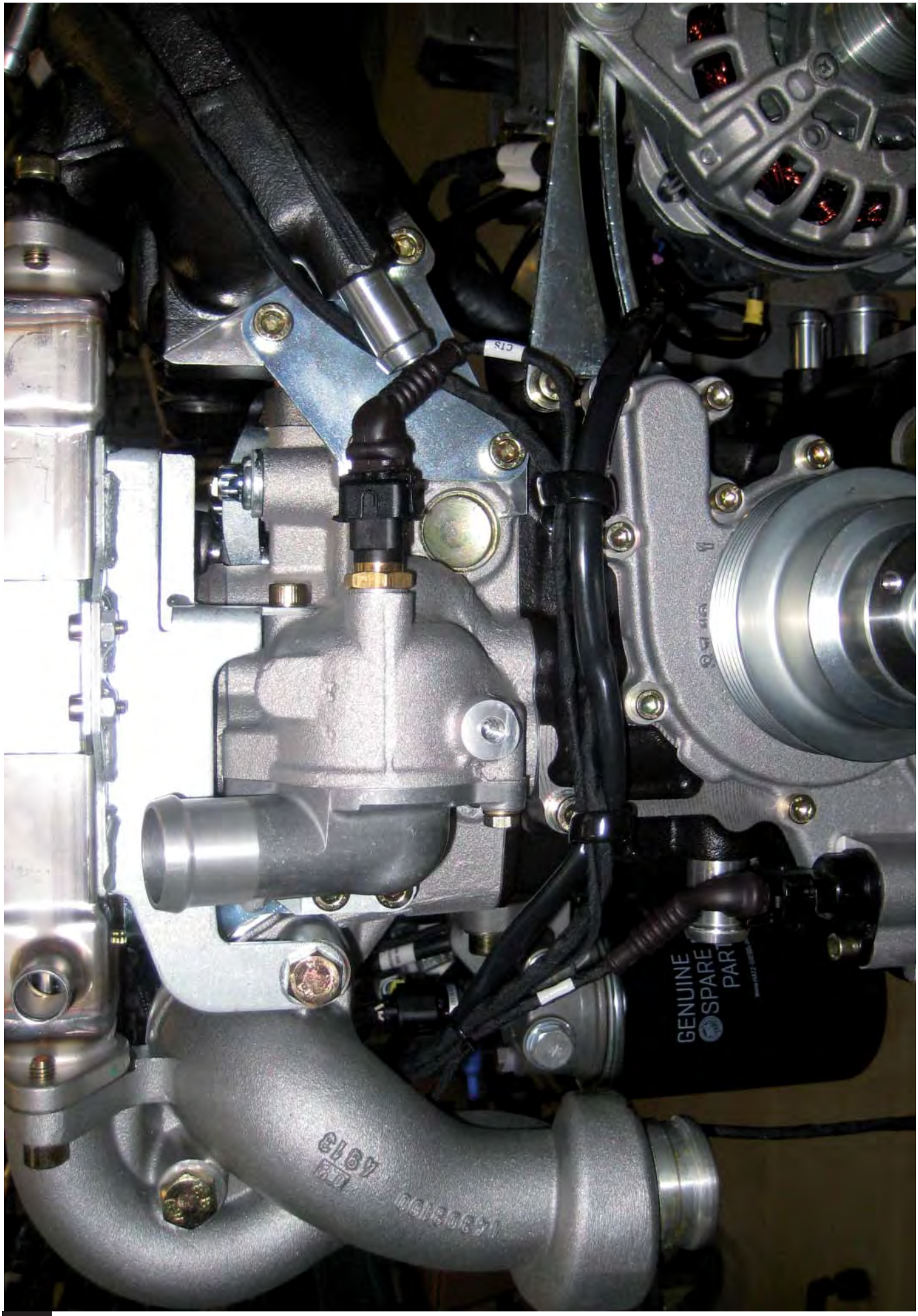
CTS
GENUINE
SPARE
PART

E3R

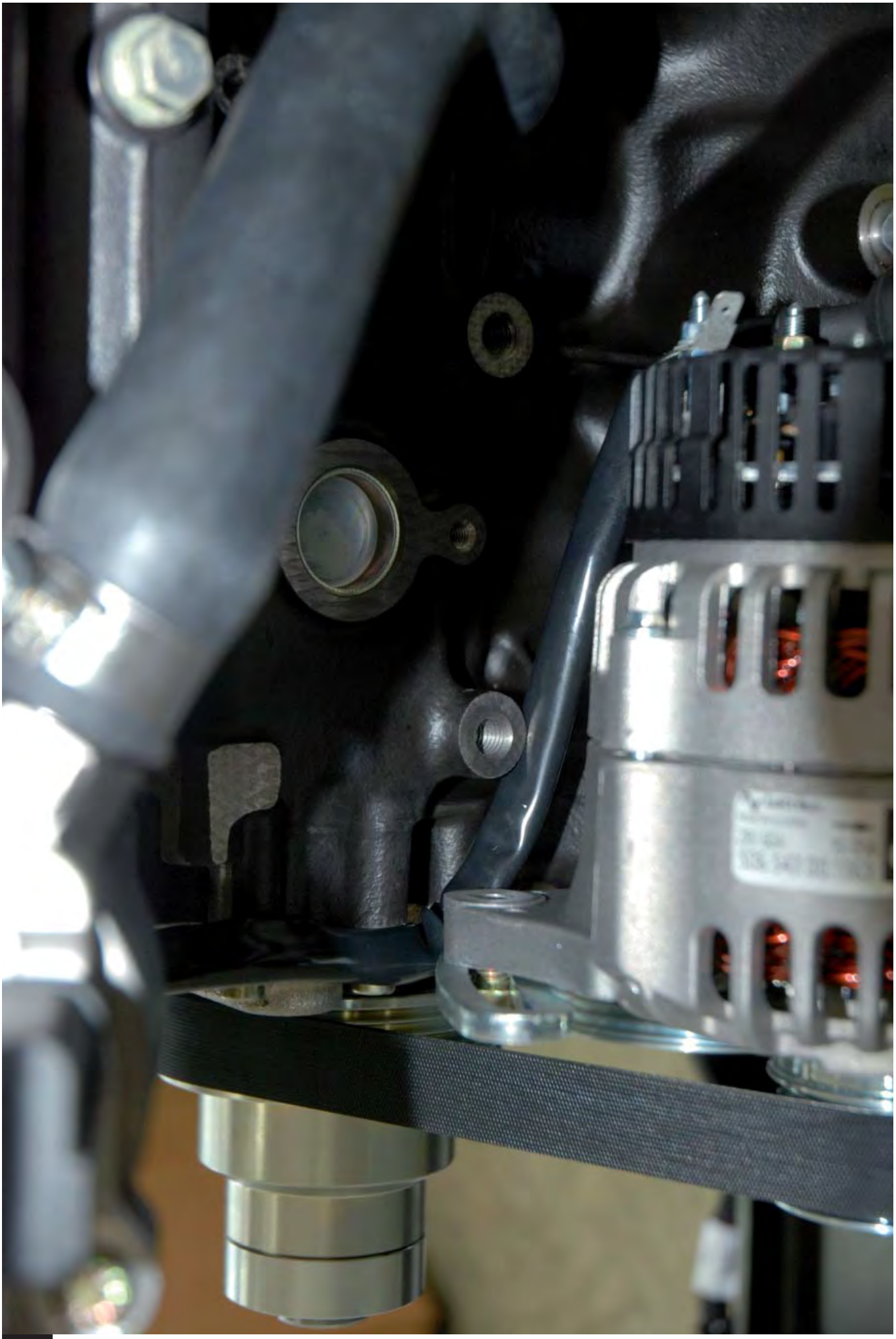

Blink code SHORT - LONG		
1.1	**Error source:**	**Error in the monitoring, display and control elements area**
	Possible error:	Indicators or cabling defective; power supply from control unit insufficient other error, not specified in more detail
	Remedies:	Check function and cabling of the indicators; check power supply to the control unit; otherwise HATZ Service must perform troubleshooting
1.2	**Error source:**	**Error in the speed sensor area**
	Possible error:	Crankshaft or camshaft sensor cabling faulty
	Remedies:	Check cabling
1.3	**Error source:**	**Error in the air supply area**
	Possible error:	Air filter soiled charge air after charge air cooler impermissibly high cabling charge air sensor, intake underpressure sensor faulty
	Remedies:	Service air filter clean charge air cooler check cabling
1.4	**Error source:**	**Error in the exhaust return area**
	Possible error:	Cabling AGR sensor faulty AGR cooler/valve clogged with deposits
	Remedies:	Check cabling Clean AGR cooler/valve
2.1	**Error source:**	**Error in the fuel low pressure system area**
	Possible error:	Water in fuel; fuel pressure too low fuel temperature too high; cabling conveyor pump or sensor faulty
	Remedies:	Drain water at fuel pre-filter; check tank contents, fill; or replace clogged fuel filter; ensure sufficient cooling of the fuel; check cabling
2.2	**Error source:**	**Error in the fuel high pressure system area**
	Possible error:	Cabling of the sensor system (injectors, rail pressure sensor, pressure control valve, high pressure pump) faulty.
	Remedies:	Check cabling
2.3	**Error source:**	**Error in oil temperature pressure area**
	Possible error:	Oil pressure too high/low oil temperature impermissibly high sensor cabling faulty
	Remedies:	Check oil level, if necessary refill oil use oil with appropriate viscosity class check water hose oil cooler. (hose kinked) +possibly clean radiator check cabling;
3.1	**Error source:**	**Error in the fluid cooling area**
	Possible error:	Coolant level impermissibly low coolant temperature impermissibly high; cabling, coolant temperature sensor faulty; Sensor faulty
	Remedies:	Refill coolant clean radiator; check cabling; replace sensor
3.2	**Error source:**	**Error in the pre glow system area**
	Possible error:	Cabling of the glow plugs faulty; one or several glow plugs faulty glow plug control unit "GCU" faulty.
	Remedies:	Check cabling check function of the glow plugs;

Charge current curve 12 V

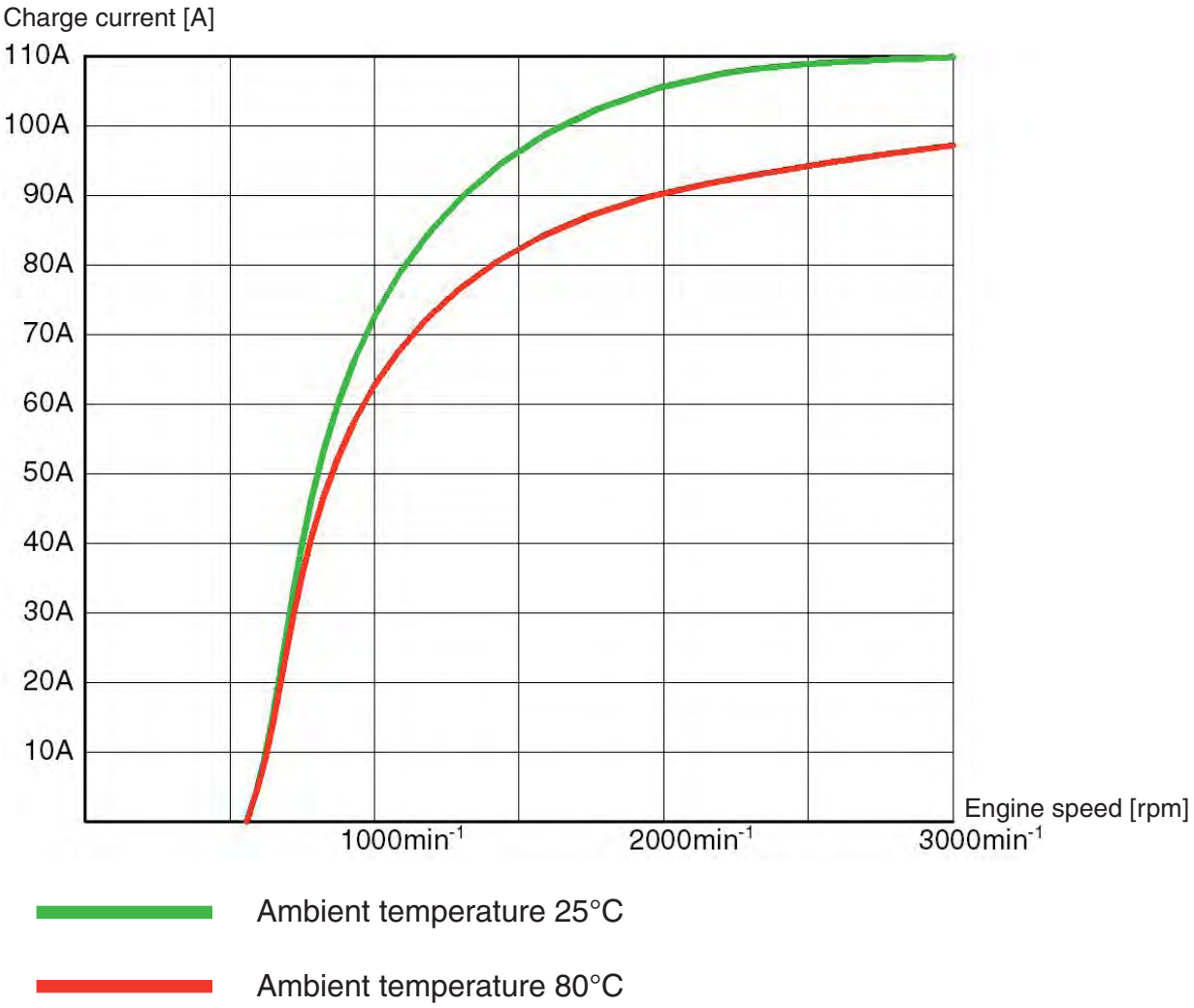
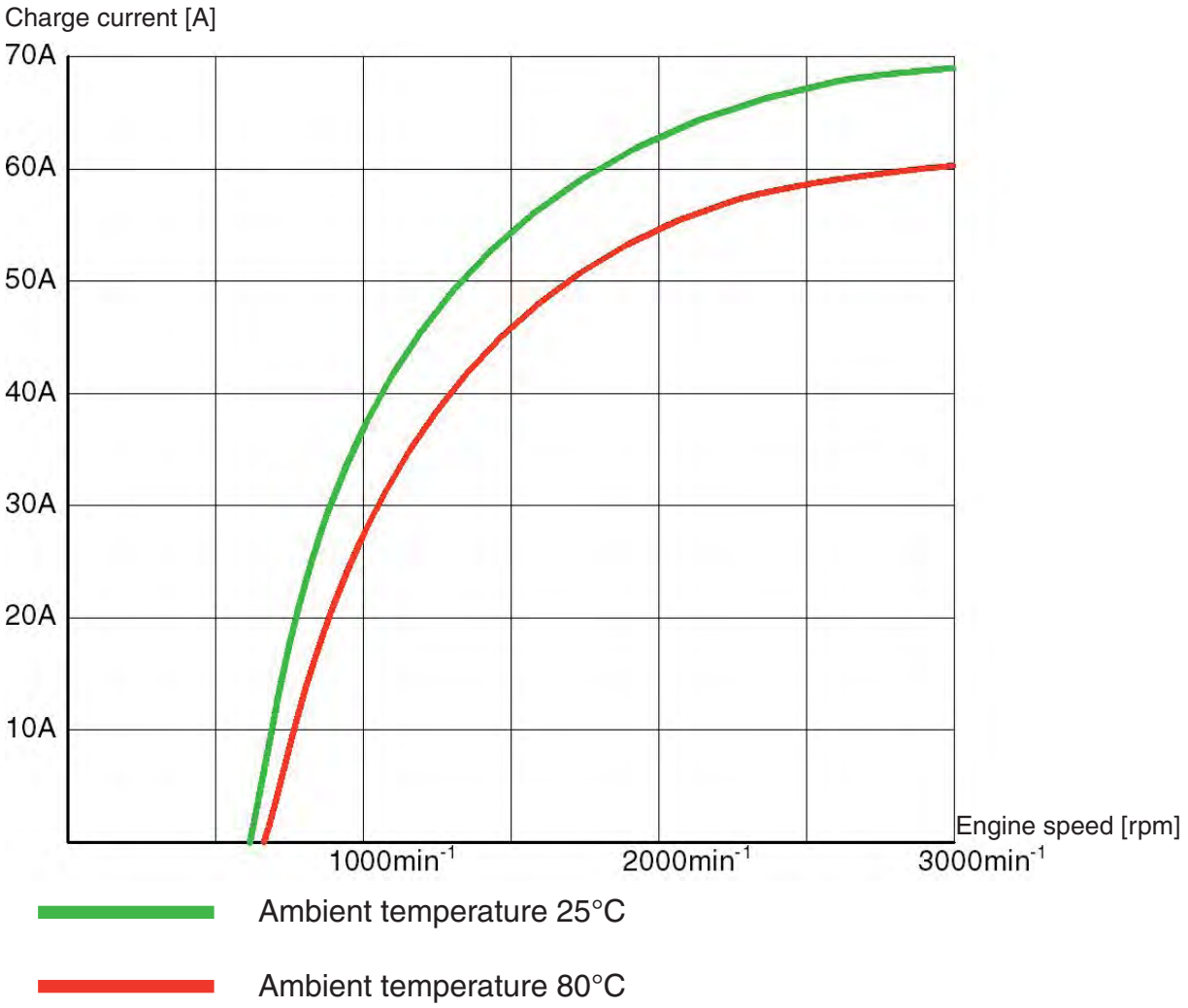
Charge current curve 24 V